TOWN OF FORT MILL
HISTORIC REVIEW BOARD MEETING
June 14, 2016
215 Main Street (SPRATT BUILDING)
4:30 PM

AGENDA

CALL TO ORDER

APPROVAL OF MINUTES

1. HRB Meeting: May 10, 2016 *[Page 2-3]*

NEW BUSINESS

1. Request for Certificate of Appropriateness *[Pages 4-7]*

Applicant Name:	Lynn Blackwell
Owner Name:	223 Main LLC
Property Address:	223 Main Street
Purpose:	Request to approve exterior improvements to the rear façade of the building (windows)
Zoning:	LC / Historic

2. Request for Preliminary Certification (Bailey Bill) *[Pages 8-67]*

Applicant Name:	Kuester Development Associates / Chip Smith
Owner Name:	Process Properties LLC
Property Address:	100 & 102 Main Street
Purpose:	Request to approve preliminary certification for the proposed rehabilitation of 100 & 102 Main Street (Centre Theatre)
Zoning:	LC / Historic

ADJOURN

MINUTES
TOWN OF FORT MILL
HISTORIC REVIEW BOARD MEETING
May 10, 2016
Town Hall, 112 Confederate Street
4:30 PM

Present: Louis Roman, Nik Radovanovic, Carolyn Blair (4:35), Melissa White, Chip Heemsoth, Assistant Planner Chris Pettit, Planning Director Joe Cronin

Absent: Jonathan Mauney, Dan Dodd

Guests: Chris Mannix (Kuester), Brian Tye (Overcash Demmitt Architects)

CALL TO ORDER

Chairman Roman called the meeting to order at 4:34 p.m.

APPROVAL OF MINUTES

Mr. Heemsoth made a motion to approve the minutes from the March 8, 2016 meeting as presented, with a second by Ms. White. The minutes were approved by a vote of 4-0.

OLD BUSINESS

Carolyn Blair arrived at 4:35, prior to the discussion of Old Business Item #1.

1. **Request for Certificate of Appropriateness: 100 & 102 Main Street:** Assistant Planner Pettit provided a brief overview of the request, the purpose of which was to approve the design concept for the proposed renovation work at 100 & 102 Main Street (old Centre Theatre). Mr. Pettit noted that the applicant would be requesting full design approval during the preliminary certification process for the Bailey Bill tax credits.

   Chris Mannix with Kuester provided an overview of the proposed design concept and rehabilitation work. In discussion of the front Main Street façade, Mr. Mannix noted that the design would bring back the original brick getting rid of the stucco as well as bringing back the historical marquee type signage on the front. The board discussed the proposed marquee signage, noting that it brought back the historical context to the building. Mr. Mannix mentioned that the sign company was creating the sign off of historical photographs of the old Centre Theatre.

   Chairman Roman briefly discussed the significance for the project as a key focal point of the downtown and praised the designers for their work thus far.

   Mr. Radovanovic questioned the outdoor patio space and how hospitable it may be. Mr. Mannix noted that the potential tenants of the building will find that space very important and the need to make it hospitable/accommodating is crucial. Mr. Radovanovic mentioned that people are what makes the space, so everything possible should be done to make it a

place for people to congregate. Further discussions occurred about how to make the space desirable for the public.

Ms. Blair made a motion to approve the concept of the proposed renovation to 100 to 102 Main Street as presented at the meeting. Ms. Radovanovic seconded the motion. The motion was approved by a vote of 5-0.

ITEMS FOR INFORMATION / DISCUSSION

Assistant Planner Pettit discussed the first draft of the Historic District Design Guidelines as prepared by Winter and Company, asking members of the board for any discussion of comments on the draft. Ms. White applauded the use of graphics and pictures as it made the draft approachable. Mr. Radovanovic noted the length of the draft seems unapproachable at first, but the way the draft is laid out provides clear guidance for an applicant as to what sections apply and what sections do not which assists in making the document usable/friendly. Ms. Blair made the point that a lot of the pictures were not from Fort Mill and requested that the pictures be annotated as far as where they are taken from. Chairman Roman made the comment that the draft meets the expectations he had for what to expect, noting that if the guidelines were followed then applicants should not have a problem getting projects approved. Mr. Pettit noted that over time, as staff becomes more comfortable and knowledgeable with the guidelines, there should be no problem guiding applicants toward projects that shouldn't have a problem getting approved.

Chairman Roman asked the board to continue to read and review the draft and to provide any further comments to staff.

Mr. Heemsoth questioned whether the HRB fencing approval at the armory, on the Elliott Street side, required the fence to have the green slats, to which Ms. Blair noted that it was discussed but not required.

There being no further business, the meeting was adjourned at 5:05 p.m.

Respectfully submitted,

Chris Pettit, AICP
Assistant Planner

Date Received: _____
Historic Review Board Date: _____

Application for a Certificate of Appropriateness

Town of Fort Mill, South Carolina

Owner / Applicant Information:

Applicant Name: LYAN BLACKWELL

Mailing Address: 223 MAIN St., FORT MILL

Telephone Number: 803.417.6800

Property Information:

Address: 223 MAIN St., FORT MILL

Current Zoning: _____

Current Use of Property: RETAIL

Submission Checklist

- ☐ Completed application*
- ☐ Drawings and specifications of proposed improvements*
- ☐ Site plan showing location of proposed improvements*
- ☐ Application fee ($100 residential / $250 non-residential)*

Additional materials may be required
*Required with submission

Work Summary: Please check all areas that apply to the proposed improvements

- ☐ DEMOLITION
- ☐ NEW STRUCTURE
- ☐ EMERGENCY REPAIR
- ☐ GRAPHICS/SIGNAGE
- ☐ MAINTENANCE

REHABILITATION
- ☐ Foundations
- ☐ Masonry
- ☐ Siding
- ☐ Roof
- ☐ Gutters/downspouts
- ☐ Chimney
- ☐ Doors/entrances
- ☐ Windows
- ☐ Porch
- ☐ Cornice/frieze
- ☐ Ornamentation
- ☐ Awning/canopy
- ☐ Storefront
- ☐ Color/painting
- ☐ Other

ADDITIONS TO EXISTING
- ☐ Room addition
- ☐ Garage
- ☐ Porch or deck
- ☐ Greenhouse
- ☐ Dormer
- ☐ Skylight
- ☐ Chimney
- ☒ Other WINDOWS TO REAR FACADE

SITE WORK
- ☐ Fence or wall
- ☐ Site lighting
- ☐ Street furniture
- ☐ Special features
- ☐ Parking
- ☐ Walks, patios
- ☐ Other

APPLICATION CONTINUED ON NEXT PAGE

P.O. BOX 159 • 112 CONFEDERATE STREET • FORT MILL, SC 29715
TELEPHONE (803) 547-2116 • FAX (803) 547-2126

Date Received: _____
Historic Review Board Date: _____

Explanation of Work: Please use the area below to provide a detailed explanation of the proposed work. When explaining the work, please provide information on the design, materials, colors, as well as installation/construction procedures. For example, when applying for a wall sign please provide detail on the design of the sign, what materials will be used, what colors will be used, and how will the sign will be affixed to the wall. Please attach continuation sheets as needed.

I AM PLANNING TO REMODEL A STORAGE ROOM IN MY BUILDING WHICH WILL REQUIRE THE INSTALLATION OF WINDOWS TO THE REAR FACADE FACING THE PARKING LOT. THE ONLY CHANGE TO THE EXTERIOR WILL BE THE WINDOW ADDITION - UPPER FLOOR ONLY.

THE INTERIOR CHANGES WILL BE MOSTLY COSMETIC WITH ONE DOORWAY ADDITION; THIS WILL REQUIRE ALTERATION OF A STRUCTURAL LOAD-BEARING INTERIOR WALL.)

THERE ARE NO CHANGES PLANNED FOR THE MAIN ST. FACADE.

Acknowledgement of Requirements: The applicant acknowledges that the information provided is complete and that any exterior modification, except for ordinary maintenance or repair (not involving change in design, material, color, or outer appearance), shall not commence until the Historic Review Board approves the specific modification through a Certificate of Appropriateness. Additional permitting may be required prior to beginning work, including zoning review, stormwater/engineering review, building permitting, and business licensing. Please note: incomplete submissions will not be accepted.

Signature

5.4.16 5.31.16 JBS
Date

P.O. BOX 159 • 112 CONFEDERATE STREET • FORT MILL, SC 29715
TELEPHONE (803) 547-2116 • FAX (803) 547-2126

APPLICATION FOR CERTIF. OF APPROPRIATENESS
FOR PROPOSED CHANGE TO 223 MAIN STREET REAR FACADE

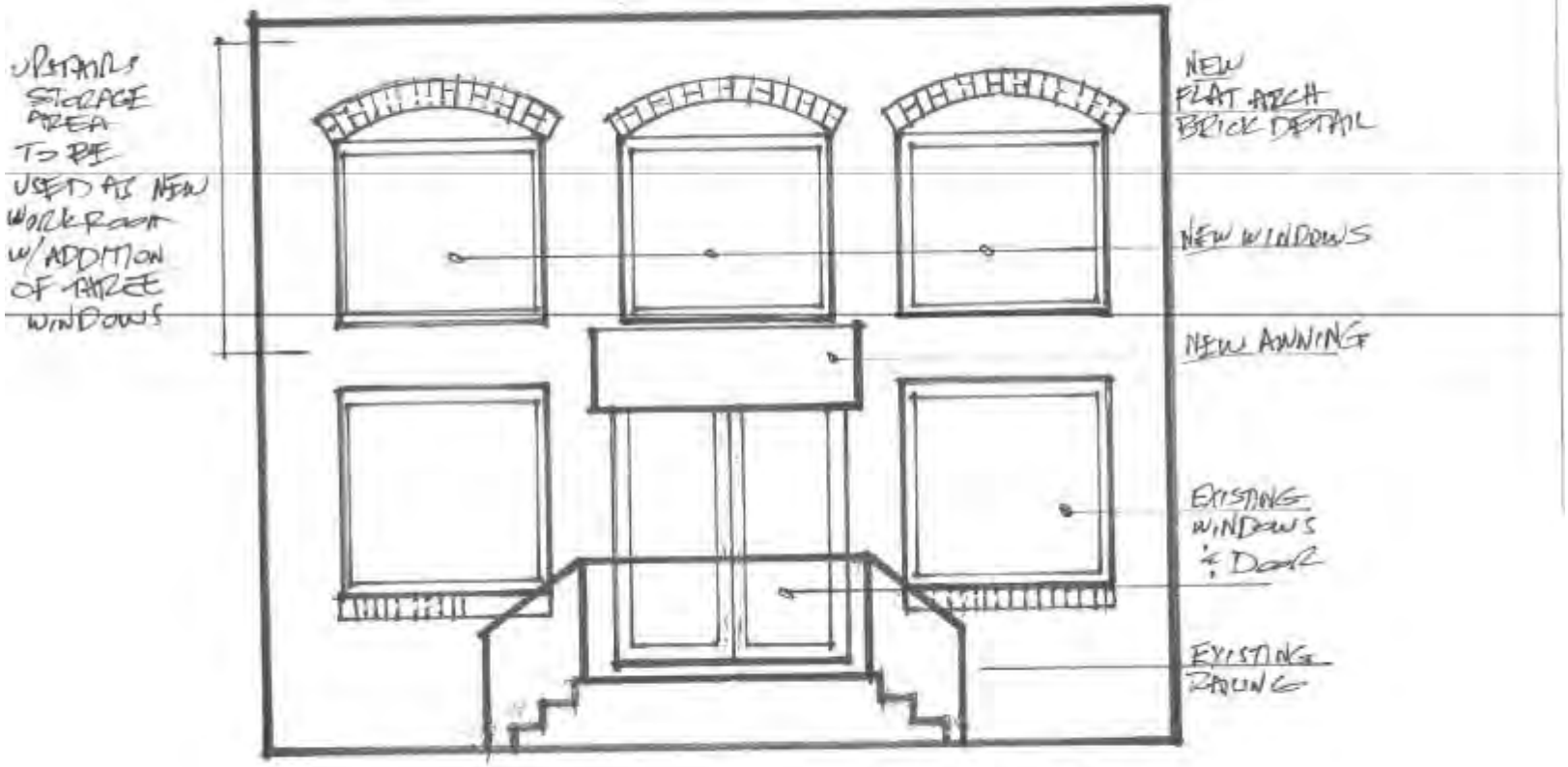

223 MAIN STREET

BACK OF BUILDING

MAIN
&
GRAY
HOME
DECORATIVES • DESIGN • FURNISHINGS
MAIN & GRAY
MAIN & GRAY

FORT MILL

Town of Fort Mill

Special Tax Assessment for Rehabilitated Historic Properties (Bailey Bill)

Application for Preliminary Certification

The Town of Fort Mill Code of Ordinances authorizes a Special Tax Assessment for Rehabilitated Historic Properties that meet the criteria for eligibility. Upon Final Certification, eligible properties will receive a special assessment equal to the pre-rehabilitation value for a period of twenty years. The provisions of the Special Tax Assessment for Rehabilitated Historic Properties shall be administered pursuant to Chapter 2, Article IV, Division 3 of the Town of Fort Mill Code of Ordinances and Section 5-21-140 of the South Carolina Code of Laws, 1976, as amended. This application is used by the Town of Fort Mill for the purpose of granting Preliminary Certification to eligible properties. A separate application will be required for Final Certification once the rehabilitation work has been completed. Completed applications, including all required attachments, may be dropped off at Town Hall, 112 Confederate Street to the attention of Joe Cronin, Planning Director.

Property Information

Name of Historic Property:	OLD CENTRE THEATRE				
Street Address:	100 MAIN ST				
City:	FORT MILL	State:	SC	Zip Code:	29715
TM #:	020-060-8010	Fair Market Value:		$585,500	

How did you determine the fair market value of the property?
(Select one. Please submit appropriate documentation with your application)

- ☐ Property appraisal completed by a real estate appraiser licensed by the State of South Carolina.
- ☐ Sale price as delineated in a bona fide contract of sale within twelve months of the time the application is submitted
- ☒ Most recent appraised value published by the York County Tax Assessor.

Applicant Information

Name of Property Owner:	CHIP SMITH				
Mailing Address:	100 MAIN ST				
City:	FORT MILL	SC		Zip Code:	29715
Phone:	803.493.0374	Fax:	NA	Email:	CHIP@EWPROCESS.COM

Historic Designation

Eligibility Requirements
(Select one. If your property does not meet one of these criteria, you are not eligible for the Special Tax Assessment for Rehabilitated Historic Properties.)

- ☐ Property is listed on the National Register of Historic Places, individually or as a contributing property within a National Register Historic District.
- ☐ Property is at least fifty (50) years old and has been determined to be eligible for listing on the National Register of Historic Places by the South Carolina Department of Archives and History.
- ☒ Property is at least fifty (50) years old and is located within the Town of Fort Mill Historic Preservation District
- ☐ Property was designated, by resolution, as eligible by town council pursuant to the eligibility criteria in Chapter 2, Article IV, Division 3, Sec. 2-201(b)(2)(b) of the Town of Fort Mill Code of Ordinances.

Please provide a BRIEF overview of the historical significance of the building.	OLD CENTRE THEATRE IS A LANDMARK ON MAIN STREET IN FORT MILL. IT HOUSED THE MOVIE THEATRE FROM THE MID 1940'S TO MID 1970'S.
In what year was the primary structure(s) built?	~1945
Have there been any major alterations or additions to the structure(s)? (Select one)	☐ Yes ☒ No
If yes, please include the dates and description of any alterations.	

Project Information

Project Start Date: (Month/Year)	07/2015	Estimated Completion Date: (Month/Year)	01/16
Total Estimated Project Cost:		$2,552,735.00	

What type of improvements will be undertaken as part of this project? (Select all that apply. Please attach a detailed description of the work to be completed with your application.)

- ☒ Repairs to the exterior of the designated building.
- ☐ Alterations to the exterior of the designated building.
- ☐ New construction on the property on which the building is located, including site work.
- ☒ Alterations to interior primary public spaces, as defined by the reviewing authority.
- ☒ Any remaining work where the expenditures for such work are being used to satisfy the minimum expenditures for rehabilitation, including, but not limited to, alterations made to mechanical, plumbing and electrical systems.

Required Attachments

Applications will not be reviewed until all required attachments have been submitted.

- ☒ Signed and completed Town of Fort Mill Application for Preliminary Certification.
- ☒ A map showing the location of the property.
- ☒ Color photographs showing the interior and exterior of the building, including, but not limited to, any areas to be rehabilitated.
- ☒ A detailed description of proposed work. (If an application has been submitted for federal Investment Tax Credits, you may attach a copy of the proposed work from the federal form.)
- ☒ Architectural floor plans showing the pre-rehabilitation conditions.
- ☒ Architectural floor plans showing the proposed rehabilitation work.
- ☒ Documentation of fair market value (a valid appraisal, contract of sale, or appraised value published by the York County Assessor are acceptable).

Optional Attachments

- ☐ There is a fee required for the review of rehabilitation work. The fee may be paid at the time the applicant applies for Preliminary or Final Certification; however, Final Certification will not be given until the fee has been paid in full. Fees shall be made payable to the Town of Fort Mill. The amount of the fee shall be as follows:
  - For owner-occupied, non-income producing properties, the fee shall be $150.00.
  - For income-producing or non-owner occupied properties, the fee shall be $300.00.

Under penalty of perjury, I certify that all information included in this application is true and correct. I understand that this property shall not be eligible for the Special Tax Assessment for Rehabilitated Historic Properties until final certification has been granted by the Town of Fort Mill pursuant to Chapter 2, Article IV, Division 3 of the Town of Fort Mill Code of Ordinances and Section 5-21-140 of the South Carolina Code of Laws, 1976, as amended

Applicant Signature _____ Date 5/3/16

For Town of Fort Mill Office Use Only

- [x] Completed application and all required attachments were received on 6/3/2016
- [x] This property meets the Historic Designation Criteria of Chapter 2, Article IV, Division 3, Sec. 2-201(b)(2)(b) of the Town of Fort Mill Code of Ordinances.
- [x] The work described in the application appears to meet the Standards for Rehabilitation of Chapter 2, Article IV, Division 3, Sec. 2-202(a) of the Town of Fort Mill Code of Ordinances.
- [x] The total estimated project cost meets Minimum Expenditures for Rehabilitation requirements of Chapter 2, Article IV, Division 3, Sec. 2-202(c) of the Town of Fort Mill Code of Ordinances.
- [x] Scheduled for Historic Review Board review on 6-14-16.
- [ ] Historic Review Board recommended ___ Approval ___ Denial on _____.
- [ ] Preliminary Certification ___ Granted ___ Denied on _____.
- [ ] Applicant notified on _____.

Application Processed by: Received by Joe Cronin, Processed by Chris Pettit

Notes:

Kuester
COMMERCIAL

Town of Fort Mill
112 Confederate St
Fort Mill, SC 29715

To the Town of Fort Mill Special Tax Assessment for Rehabilitated Historic Properties Authorities,

Below is a description of the proposed work to be completed during the rehabilitation of the Old Centre Theatre located at 100 Main St in Fort Mill, SC 29715:

The rear portion of the 100 Main St. once housed the seating and viewing area of the Theatre. It currently contains approximately 4,000 square feet of usable space. The goal is to turn the single floor, 4,000 square foot space into a two floor, 8,000 square foot first class office. Windows will be added throughout the building to bring in natural sunlight. New mechanical, electrical, and plumbing components are necessary for this portion of the building, as well as fire sprinklers. Fire damaged materials will be removed, and what remains will be updated to adhere to Fort Mill building code standards. The building will have updates and upgrades throughout to accommodate a class A office user. Exposed brick will be a major feature throughout the interior of the building. The exterior will be cleaned and brought to current ADA compliance for entryways. We anticipate this taking 180 days.

Upon completing construction of the rear portion of the building, the front portion, which contains 4,000 square feet of office space occupied by EW Process, will be vacated. Upgrades will be made to this unit to accommodate a retail user on the first floor, and an office user on the second floor. The first floor will add a patio to the current 700 square foot garden area. Also, the floor plan will change according to a tenants wishes. The second floor will remain the same, as it currently works as a functioning office. The stucco from the front façade of the building will be removed to bring the Main Street portion of the building back to its original look. A marquee sign will be added to replicate the original one on the building as a way of promoting the history of both the Theatre and downtown Fort Mill.

I hope this description, along with the architectural drawings, helps explain the scope of work of this project. Should there be any questions, I will gladly answer them.

Kind Regards,

Christopher S. Mannix | Associate Developer

www.KuesterCRE.com
127 Ben Casey Dr., #103, Fort Mill, SC 29708
Phone: 803-578-7788 or 855-723-2500

Nationwide Insurance

ALLOWED

EXIT

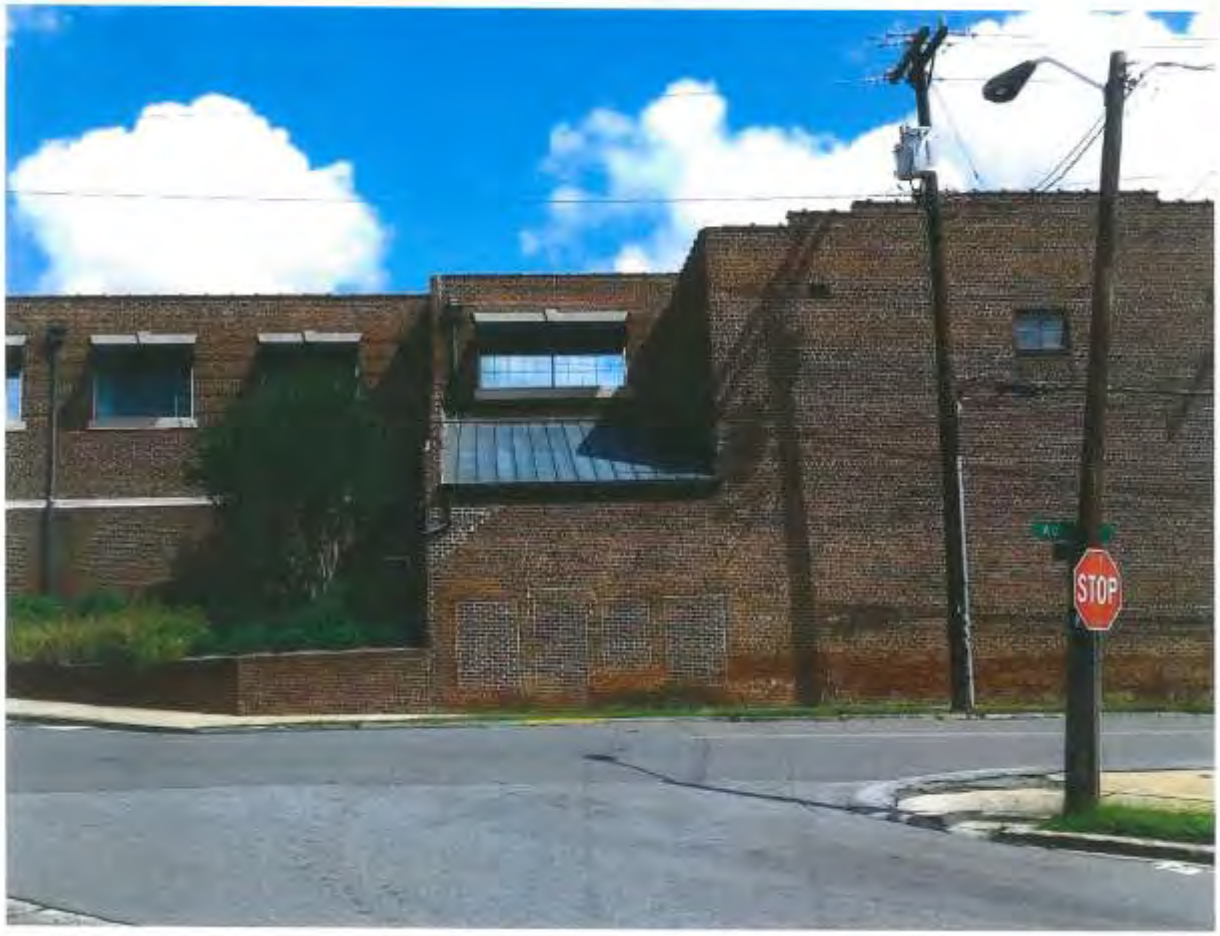
STOP

Fort Mill Theater Reinvention
Fort Mill, SC

Kuester COMMERCIAL

2016 MARCH 07

MAIN STREET PATIO RENDERING

ODA

Revised Submission: May '16

Fort Mill Theater Reinvention
Fort Mill, SC

Feb 15, 2016

Exterior Perspective

ODa

OLD CENTRE THEATRE REHABILITATION – CONSTRUCTION DOCUMENTS

FORT MILL THEATER RENOVATION- PHASE 1
FORT MILL, SC

VICINITY MAP

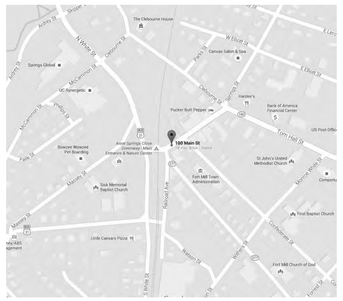

SYMBOLS LEGEND

1 AE101 SIM	DETAIL TARGET
1 Ref A101 1 Ref 1 Ref 1 Ref	ELEVATION TARGET
1 AE101 SIM	SECTION TARGET
101A	DOOR NUMBER
1i	STOREFRONT TAG
G1	GLASS TYPE
ROOM NAME 101	ROOM NAME AND FINISH NUMBER
1i	INTERIOR WALL TYPE
col	COLUMN/REFERENCE GRID IDENTIFICATION
	BEARING OR FLOOR ELEVATION
WS-01	ASSEMBLY TAG, SEE WALL, ROOF AND FLOOR SYSTEM SHEETS
W-BRKS	KEYNOTE TAG
T1	FINISH TAG
T1.18	TOILET ACCESSORY TAG

DEMOLITION GENERAL NOTES

1. DASHED LINES INDICATE ITEMS TO BE DEMOLISHED.
2. WHERE BUILDING ELEMENTS NOT SPECIFIED TO BE REMOVED OBSTRUCT DEMOLITION OR ALTERATIONS CALLED FOR, G.C. SHALL NOTIFY ARCHITECT AND OWNER BEFORE PROCEEDING.
3. THE GENERAL CONTRACTOR SHALL FIELD VERIFY ALL EXISTING CONDITIONS AND NOTIFY THE ARCHITECT OF ANY DISCREPANCIES WITH THE DRAWINGS, PRIOR TO BEGINNING ANY WORK OR ORDERING ANY MATERIALS.
4. ALL BUILDING COMPONENTS AND FINISHES WHICH ARE TO REMAIN IN PLACE SHALL BE PROTECTED FROM DAMAGE, AND IF DAMAGED, SHALL BE REPAIRED OR REPLACED AT NO COST TO THE OWNER.
5. ALL NEW OPENINGS IN FIRE RATED ASSEMBLIES SHALL CONFORM TO THE CURRENT NC BLDG CODE AS WELL AS OTHER APPLICABLE CODES.
6. COORDINATE ALL ACCESS POINTS WITH THE OWNER PRIOR TO BEGINNING ANY WORK.
7. PATCH AND REPAIR ALL EXISTING CEILINGS, PARTITIONS AND FLOORS DISTURBED FOR NEW WORK AND FINISHES.
8. REMOVE FROM SITE AS SOON AS POSSIBLE ALL DEMOLISHED MATERIALS, DEBRIS AND RUBBISH. DO NOT ACCUMULATE DEBRIS ON THE FLOOR OR AT THE SITE.
9. THE ARCHITECT AND ENGINEERS HAVE MADE A REVIEW OF THE EXISTING CONDITIONS, BUT IT IS THE RESPONSIBILITY OF THE GENERAL CONTRACTOR AND ALL TRADES CONCERNED TO VERIFY ACTUAL CONDITIONS AND DETAILS THAT WILL AFFECT NEW WORK AND TO NOTIFY THE ARCHITECT OF ANY DISCREPANCIES BEFORE BEGINNING ANY DEMOLITION OR CONSTRUCTION WORK.
10. REMOVE EXISTING WALLS, DOORS, FLOORING AND CEILING FINISHES BACK TO BASE BUILDING SURFACES AS INDICATED.
11. PATCH EXISTING FLOOR, WALL AND CEILING SURFACES IN AREA OF DEMOLITION AS NEEDED TO RECEIVE NEW FINISHES.
12. AFTER REMOVAL OF PLUMBING LINES ETC. FILL ALL OPENINGS IN CONCRETE FLOOR WITH CONCRETE PATCHES. MAINTAIN REQUIRED FIRE RATING.
13. FIRE ALARM SYSTEM IN OCCUPIED PORTIONS OF BUILDING TO REMAIN OPERATIONAL DURING CONSTRUCTION.
14. DEMOLITION OF PARTITIONS WITH ELECTRICAL DEVICES TO BE COORDINATED WITH ELECTRICAL CONTRACTOR. ELECTRICAL TERMINATIONS TO BE PERFORMED BY ELECTRICAL CONTRACTOR.
15. WHERE EXISTING ELECTRICAL IS PERMANENTLY REMOVED, ALL ASSOCIATED BOXES, DEVICES AND WIRING TO BE REMOVED BACK TO SOURCE. EXISTING CONDUIT THAT IS NOT ACCESSIBLE TO BE ABANDONED AFTER IT IS STRIPPED OF ALL WIRING.
16. GC IS RESPONSIBLE FOR REPAIR/ REINSTALLATION OF ANY MECH, ELECT, AUDIO VISUAL, FIRE PROTECTION EQUIPMENT, ETC. THAT IS DAMAGED OR TEMPORARILY REMOVED DURING DEMOTION.
17. GC IS RESPONSIBLE FOR VERIFICATION OF ALL EXISTING CONDITIONS. NOTIFY ARCH IF DISCREPANCIES ARE FOUND.
18. GC IS RESPONSIBLE FOR VERIFICATION AND PROPER RETENTION OF ALL EXISTING FIRE RATED STRUCTURE, WALLS, FLOORS, ETC WITH-IN SCOPE OF WORK. REPAIR DAMAGED FIRE RATED ASSEMBLIES AS REQ'D TO OBTAIN PROPER RATING.

GENERAL NOTES

1. DO NOT SCALE DRAWINGS. WRITTEN DIMENSIONS GOVERN. IF DIMENSIONS ARE IN QUESTION OBTAIN CLARIFICATION FROM ARCHITECT.
2. ALL DIMENSIONS ARE GIVEN TO FACE OF MASONRY WALLS, FACE OF STUD, AND CENTERLINE OF STRUCTURAL COLUMNS, UNO. ALL DIMENSIONS MARKED "CLEAR" SHALL BE MAINTAINED.
3. "ALIGN" SHALL MEAN TO ACCURATELY LOCATE FINISH FACES IN THE SAME PLANE.
4. "SIMILAR" MEANS COMPARABLE CHARACTERISTICS FOR THE CONDITIONS NOTED. VERIFY DIMENSIONS AND ORIENTATION ON PLANS AND ELEVATIONS
5. FULL NFPA 13 SPRINKLER SYSTEM SHALL BE INSTALLED THROUGH-OUT ENTIRE BUILDING AS PART OF THIS RENOVATION. THIS AREA SHALL INCLUDE CURRENTLY OCCUPIED AREA OUTSIDE OF EXISTING THEATER SPACE AS WELL AS THEATER SPACE SHOWN ON PLANS

ARCHITECTURAL

SHEET NUMBER	SHEET TITLE	ISSUE DATE	CURRENT REVISION	CURRENT REVISION DATE
A0.00	COVER SHEET	04/08/16	1	05/25/16
A0.10	APPENDIX B- CODE INFO	04/08/16	1	05/25/16
A0.11	LIFE SAFETY PLAN- LVL 1	04/08/16	1	05/25/16
A0.12	LIFE SAFETY PLAN- LVL 2	04/08/16		
A0.13	UL ASSEMBLIES	04/08/16		
A0.20	ARCHITECTURAL SITE PLAN	04/08/16		
A0.30	FLOOR TYPES, INT WALL TYPES, & EXT WALL SYSTEMS	04/08/16		
AE1.10	EXISTING FLOOR PLANS	04/08/16		
AE2.10	EXISTING BUILDING ELEVATIONS	04/08/16		
AD1.10	DEMOLITION PLANS	04/08/16	1	05/25/16
AD2.10	DEMOLITION BUILDING ELEVATIONS	04/08/16		
A1.10	RENOVATED FLOOR PLANS	04/08/16	1	05/25/16
A1.20	RENOVATED REFLECTED CEILING PLANS	04/08/16		
A1.21	ENLARGED RENOVATED REFLECTED CEILING PLANS	04/08/16		
A2.10	RENOVATED BUILDING ELEVATIONS	04/08/16		
A3.10	RENOVATED BUILDING SECTIONS	04/08/16		
A4.10	PLAN AND ELEVATION DETAILS	04/08/16		
A5.10	ENLARGED RESTROOM PLANS, ELEV, & DETAILS	04/08/16		
A6.10	DOOR SCHEDULES, STOREFRONT ELEV, & DTLS	04/08/16		
A9.10	ENLARGED STAIR PLANS & DETAILS	04/08/16		
A9.11	STAIR SECTIONS	04/08/16		
A9.12	ADA RAMP PLAN, SECTION, & DETAILS	04/08/16		
A10.10	FLOOR FINISH PLANS	04/08/16		

STRUCTURAL

SHEET NUMBER	SHEET TITLE	ISSUE DATE	CURRENT REVISION	CURRENT REVISION DATE
S1.01	GENERAL NOTES AND TYPICAL SECTIONS AND DETAILS	04/08/16		
S2.01	FOUNDATION PLAN	04/08/16		
S2.02	SECOND FLOOR FRAMING PLAN	04/08/16		

MECHANICAL

SHEET NUMBER	SHEET TITLE	ISSUE DATE	CURRENT REVISION	CURRENT REVISION DATE
M0.11	MECHANICAL COVER SHEET	04/08/16		
M1.11	1ST FLOOR MECHANICAL PLAN	04/08/16		
M1.12	2ND FLOOR MECHANICAL PLAN	04/08/16		
M3.00	MECHANICAL DETAILS	04/08/16		

ELECTRICAL

SHEET NUMBER	SHEET TITLE	ISSUE DATE	CURRENT REVISION	CURRENT REVISION DATE
E0.11	ELECTRICAL COVER SHEET	04/08/16		
E1.11	1ST FLOOR LIGHTING PLAN	04/08/16	1	05/25/16
E1.12	2ND FLOOR LIGHTING PLAN	04/08/16		
E2.11	FIRST FLOOR POWER PLAN	04/08/16		
E2.12	SECOND FLOOR POWER PLAN	04/08/16		
E3.00	ELECTRICAL DETAILS	04/08/16		

PLUMBING

SHEET NUMBER	SHEET TITLE	ISSUE DATE	CURRENT REVISION	CURRENT REVISION DATE
P0.11	PLUMBING COVER SHEET	04/08/16		
P1.11	1ST FLOOR SANITARY PLAN	04/08/16		
P1.12	2ND FLOOR SANITARY PLAN	04/08/16		
P2.11	FIRST FLOOR DOMESTIC WATER PLAN	04/08/16	1	05/25/16
P2.12	SECOND FLOOR DOMESTIC WATER PLAN	04/08/16		

ODa
overcash demmitt
2010 south tryon st. suite 1a
charlotte north carolina 28203
office.704.332.1615
web. www.oda.us.com

STATE OF SOUTH CAROLINA
STEPHEN F. OVERCASH
CHARLOTTE, N. C.
9602
REGISTERED ARCHITECT
4-8-16

STATE OF SOUTH CAROLINA
OVERCASH DEMMITT ARCHITECTS
Charlotte, NC
90032
REGISTERED ARCHITECTS

Kuester COMMERCIAL

Fort Mill Theater Renovation- Phase I

100 Main Street
Fort Mill, SC 29715

FOR CONSTRUCTION
ISSUE DATE: 04/08/16

No.	Description	Date
1	Permit Review Comments	05/25/16

COVER SHEET

ARCHITECTURAL

OVERCASH DEMMITT ARCHITECTS
2010 SOUTH TRYON ST. SUITE 1A
CHARLOTTE, NC 28203
704.332.1615

STRUCTURAL

JOHN PLUMMER JR, PE
112 OLD STATESVILLE RD, SOUTH, SUITE 108
HUNTERSVILLE, NC 28078
704-948-0766

MECHANICAL, ELECTRICAL, PLUMBING

C2E SOLUTIONS
1401 CENTRAL AVE, SUITE 200-J
CHARLOTTE, NC 28205
540-314-1578

A0.00

Copyright 2016 Overcash Demitt Architects

ODA No. 152960

5/25/2016 9:00:57 AM

2012 APPENDIX B: BUILDING CODE SUMMARY FOR ALL COMMERCIAL PROJECTS

GENERAL INFORMATION:

Name of Project: FORT MILL THEATER RENOVATION
Address: 100 MAIN STREET, FORT MILL, SC Zip Code 29715
Proposed Use: BUSINESS
Owner/Authorized Agent: CHRIS MANNIX Phone# 704-973-9019 E-Mail chris@kuestercre.com
Owned By: ☐ City/County ☒ Private ☐ State
Code Enforcement Jurisdiction: ☐ City ☒ County YORK ☐ State

PROJECT SUMMARY:

Building description:

Existing building renovation and partial change of use from assembly to business

Scope of work details: (if phased construction, please see plan submittal guidelines)

Install new level 2 floor as well as core bathrooms and stair in preperation for future office upfit in a portion of the building previously used as a theater. Office upfit to be done under seperate future permit.

Does this project have air rights, easements, an assumed or deeded property line, no build easements or other circumstances similar to the aforementioned? ☒ No ☐ Yes

Alternative means of compliance request:
N/A

☐ Industrial equipment with declaration document attached.

☐ RTAP (Revisions to approved plans.)

DESIGN PROFESSIONAL INFORMATION:

LEAD DESIGN PROFESSIONAL: Stephen Overcash

DESIGNER	FIRM	NAME	LICENSE#	TELEPHONE#	EMAIL
Architectural	Overcash Demmitt	Stephen Overcash	3864	704-332-1615	sovercash@oda.us.com
Civil	N/A				
Electrical	C2 Engineering	Ryan Caya	26307	704-266-0942	ryan@rcengineering.net
Fire Alarm					
Plumbing	C2 Engineering	Ryan Caya	26307		ryan@rcengineering.net
Mechanical	C2 Engineering	Ryan Caya	26307		ryan@rcengineering.net
Sprinkler-Standpipe	N/A				
Structural	John Plummer Eng	John Plummer	21526	704-948-0766	john@jlpjrpe.com
Retaining Walls>5' high	N/A				
Landscape	N/A				

TYPE OF WORK BEING PERFORMED:

What type of work is being performed?
☐ New building
☐ Addition
☐ Upfit
☒ Alteration/ Renovation

BUILDING CODE EDITION:

Building Code: ☒ 2012 IBC
☐ 2012 Chapter 34 (attached building evaluation)
☐ 2015 IBC Existing Building Code

New Building: ☐ New building ☐ Shell building
☐ First time interior completion (upfit)
☐ Additional

Existing Building: ☒ Change of use/occupancy
☐ Building/ tenant space interior completion (Alteration/ Renovation)

Years of construction: 1900 Previous use: Assembly

REHAB CODE (Existing Building Code):

☐ 2012 IBC Rehab Code Information:

Check all that apply:

☐ Repair ☐ Renovation ☐ Alteration ☐ Reconstruction ☐ Change of Use ☐ Addition

Last known legal occupancy use:: Historical Property: N/A
Original building construction date: Date of preliminary review:
Justifications for using the REHAB code:

Reviewers Notes for Field Inspector:

BUILDING DATA:

Construction Type: ☐ I-A ☐ III-A ☐ III-A ☐ IV ☐ V-A
☐ I-B ☐ II-B ☐ III-B ☒ V-B

Mixed construction: ☒ No ☐ Yes Types:

Sprinklers: ☐ No ☒ * Yes ☐ Partial ☒ NFPA 13-2010 ☐ NFPA 13R-2010 ☐ NFPA 13D-2010
Standpipes: ☒ No ☐ Yes Class: ☐ I ☐ II ☐ III ☐ NFL ☐ WA ☐ Dry NFPA 14-2010
Fire District: ☒ No ☐ Yes Floor Hazard Area: ☒ No ☐ Yes
Building Height: 32'-4" Feet Number of Stories: 2 High Rise: ☒ No ☐ Yes
Mezzanine: ☒ No ☐ Yes

* SPRINKLERS ARE TO BE INSTALLED THROUGH-OUT ENTIRE EXIST BLDG AS PART OF THIS RENOVATION

GROSS BUILDING AREA

Floor	Existing (sq.ft.)	New (sq.ft.)	Renovated (sq.ft.)	Sub-Total
First Floor	6,280 SF	N/A	3,870 SF	N/A
Second Floor	5,950 SF	N/A	3,870 SF	N/A
Third Floor	N/A	N/A	N/A	N/A
Fourth Floor	N/A	N/A	N/A	N/A
Total			7,740 SF	12,230 SF

ALLOWABLE AREA: CHAPTER 5

OCCUPANCY

Primary Occupancy:
Assembly 303 ☐ A-1 ☐ A-2 ☐ A-3 ☐ A-4 ☐ A-5
Business 304 ☒ B
Educational 305 ☐ E
Factory 306 ☐ F-1 Moderate ☐ F-2 Low
Hazardous 307 ☐ H-1 Detonate ☐ H-2 Deflagrate ☐ H-3 Combust ☐ H-4 Health ☐ H-5 HPM
Institutional 308 ☐ I-1 ☐ I-2 ☐ I-3 ☐ I-4 Day Care
I-3 Use Condition ☐ 1 ☐ 2 ☐ 3 ☐ 4 ☐ 5
Mercantile 309 ☐ M
Residential 310 ☐ R-1 ☐ R-2 ☐ R-3 ☐ R-4
Storage 311 ☐ S-1 Moderate ☐ S-2 Low ☐ High-piled
☐ Parking Garage ☐ Open ☐ Enclosed ☐ Repair Garage
Utility and Miscellaneous 312 ☐ U

Accessory Occupancies (<- 10%):
Assembly 303 ☐ A-1 ☐ A-2 ☐ A-3 ☐ A-4 ☐ A-5
Business 304 ☐ B
Educational 305 ☐ E
Factory 306 ☐ F-1 Moderate ☐ F-2 Low
Hazardous 307 ☐ H-1 Detonate ☐ H-2 Deflagrate ☐ H-3 Combust ☐ H-4 Health ☐ H-5 HPM
Institutional 308 ☐ I-1 ☐ I-2 ☐ I-3 ☐ I-4 Day Care
I-3 Use Condition ☐ 1 ☐ 2 ☐ 3 ☐ 4 ☐ 5
Mercantile 309 ☐ M
Residential 310 ☐ R-1 ☐ R-2 ☐ R-3 ☐ R-4
Storage 311 ☐ S-1 Moderate ☐ S-2 Low ☐ High-piled
☐ Parking Garage ☐ Open ☐ Enclosed ☐ Repair Garage
Utility and Miscellaneous 312 ☐ U

INCIDENTAL USES:
☐ Furnace room where any piece of equipment is over 400,000 Btu per hour input
☐ Room with boilers where the largest piece of equipment is over 15 psi and10 horsepower
☐ Refrigerant machine room
☐ Hydrogen cutoff rooms, not classified as Group H
☐ Incinerator rooms
☐ Paint shops, not classified as Group H, located in occupanices other than Group F
☐ Laboratories and vocational shops, not classified as Group H, located in a Group E or I-2 occupancy
☐ Laundry room over 100 square feet
☐ Group I-3 cells equipped with padded surfaces
☐ Group I-2 waste and linen collection rooms
☐ Waste and linen collection rooms over 100 square feet
☐ Stationary storage batter systems having a liquid electrolyte capacity of more than 50 gallons, or a lithium-ion capacity of 1,000 pounds used for facility standby power, emergency power, or uninterrupted power supplies
☐ Rooms containing fire pumps
☐ Room containing Life-Safety generator
☐ Room containing primary transformers
☐ Group I-2 storage rooms over 100 square feet
☐ Group I-2 commercial kitchens
☐ Group I-2 laundries equal to or less than 100 square feet
☐ Group I-2 room or spaces that contain fuel-fired heating equipment

Special Uses: ☐ 402 ☐ 403 ☐ 404 ☐ 405 ☐ 406 ☐ 407 ☐ 408 ☐ 409 ☐ 410 ☐ 411 ☐ 412 ☐ 413 ☐ 414 ☐ 415 ☐ 416 ☐ 417 ☐ 418 ☐ 419 ☐ 420 ☐ 421 ☐ 422 ☐ 423 ☐ 424 ☐ 425 ☐ 426 ☐ 427

Special Provisions: ☐ 509.2 ☐ 509.3 ☐ 509.4 ☐ 509.5 ☐ 509.6 ☐ 509.7 ☐ 509.8 ☐ 509.9

Mixed Occupancy: ☒ No ☐ Yes Separation:_____Hr. Exception:
☐ Incidental Use Separation (508.2.5) ☐ Accessory Occupancy (508.2)
This separation is not exempt as a Non-Separated Use (see exceptions).

☐ Non-Separated Use (508.3)
The required type of construction for the building shall be determined by applying the height and area limitations for each of the applicable occupancies to the entire building. The most restrictive type of construction, so determined, shall apply to the entire building.

☐ Separated use (508.4)- See below for calculations
For each story, the area of the occupancy shall be such that the sum of the ratios of the actual floor area of each use divided by the allowable floor area for each use shall not exceed 1. (508.4.2)

Actual Area of Occupancy A / Allowable Area of Occupancy A + Actual Area of Occupancy B / Allowable Area of Occupancy B ≤1

_____ + _____ + ____ = ≤1.00

ALLOWABLE AREA

Story Number	Description and Use	A Building Area Per Story (Actual)	B Table 503 Area	C Area for Frontage Increase	D Area for Sprinkler Increase	E Allowable Area or Unlimited	F Maximum Building Area
First Floor	Business	6,280 SF	9,000 SF	N/A	9,000	18,000	
Second Floor	Business	5,950 SF	9,000 SF	N/A	9,000	18,000	
Third Floor							
Fourth Floor							
							36,000 SF

1. Frontage area increases from Section 506.2 are computed thus: N/A
   a. Perimeter which fronts a public way or open space having 20 feet minimum width= _____(F)
   b. Total Building Perimeter= _____(P)
   c. Ratio (F/P)= _____ (F/P)
   d. W=Minimum width of public way= _____(W)
   e. Percent of frontage increase I(f)= [F/P-0.25]x W/30= _____ (%)
2. The sprinkler increase per Section 506.3 is as follows:
   a. Multi-story building I(s)=200 percent
   b. Single story building I(s)=300 percent
3. Unlimited area applicable under conditions of Sections Group B, F, M, S, A-4 (507.3), A-3 (507.6); Group A motion picture (507.11); Covered Mall Buildings (507.12); and H-2 aircraft paint hangers (507.9).
4. Maximum Building Area=total number of stories in the building x E, But not greater than 3xE (506.4.1).
5. The maximum area of a single-use parking garage shall be permitted to comply with Table 406.3.5. The maximum area of air traffic control towers must comply with table 412.3.2.

ALLOWABLE HEIGHT: CHAPTER 5

	Allowable (Table 503)	Increased for Sprinklers (506.3)	Shown on Plans	Code Reference
Type of Construction	Type:	V-B	Type: V-B	
Building Height in Feet	Feet= 40 FT	Feet= H + 20'= 60'	32'-4"	
Building Height in Stories	Stories= 2	Stories + 1= 3	Stories= 2	

FIRE PROTECTION REQUIREMENTS: CHAPTER 6

Life Safety Plan Sheet #, if Provided: A0.11

Building Element	Fire Separation Distance (Feet)	Rating* Required	Rating* Provided (w/ * Reduction)	Detail # and Sheet #	Design # for Rated Assembly	Design # for Rated Penetration	Design # for Rated Joints
Structural frame, including columns, girders, trusses	N/A	0	0	N/A	N/A	N/A	N/A
Bearing Walls							
Exterior (T602)							
North	<5'	1 HR	4 HR *	N/A	N/A	N/A	N/A
East	5<X<10	1 HR	4 HR *	N/A	N/A	N/A	N/A
West	<5'	1 HR	4 HR *	N/A	N/A	N/A	N/A
South	10<X<30	1 HR	4 HR *	N/A	N/A	N/A	N/A
Interior	N/A	N/A	N/A	N/A	N/A	N/A	N/A
Nonbearing walls and partitions							
Exterior walls (T602)							
North	N/A	N/A	N/A	N/A	N/A	N/A	N/A
East	N/A	N/A	N/A	N/A	N/A	N/A	N/A
West	N/A	N/A	N/A	N/A	N/A	N/A	N/A
South	N/A	N/A	N/A	N/A	N/A	N/A	N/A
Interior walls and partitions	N/A	N/A	N/A	N/A	N/A	N/A	N/A
Floor Construction*** ***including supporting beams and joists		0	0	N/A	N/A	N/A	N/A
Roof Construction including supporting beams and joists		0	0	N/A	N/A	N/A	N/A
Shaft Enclosures- Exit S708.4		N/A	N/A	N/A	N/A	N/A	N/A
Shaft Enclosures- Other S708.4		N/A	N/A	N/A	N/A	N/A	N/A
Corridor Separation T1018.1		0	0	N/A	N/A	N/A	N/A
Occupancy Separation T508.4		N/A	N/A	N/A	N/A	N/A	N/A
Party/ Fire Wall Separation T706.4		N/A	N/A	N/A	N/A	N/A	N/A
Smoke Barrier Separation S710		N/A	N/A	N/A	N/A	N/A	N/A
Tenant Separation S402.7.2		N/A	N/A	N/A	N/A	N/A	N/A
Incidental Use Separation T508.2.5		N/A	N/A	N/A	N/A	N/A	N/A

* 2012 IBC Table 721.1(2), Item Number 1-1.1 was used to determine fire rating of existing mansonry exterior wall. 1 hour rating via Item Number 15-1.15 is to be used for any new exterior wall infill.

WALL LEGENDS:

CHECK IF THE FOLLOWING ARE PRESENT AND INDICATED BY A WALL LEGEND ON ALL PLANS

☐ Fire Walls 706 ☐ Fire Barriers 707 ☐ Shaft Enclosure 708 ☐ Smoke Barriers 709 ☐ Smoke Partitions 710

☐ Horizontal Assemblies 711 ☒ Non Rated Walls are Present

PERCENTAGE OF WALL OPENING CALCULATIONS:

Fire Separation Distance (Feet) From Property Lines	Degree of Openings Protection (Table 705.8)	Allowable Area (%)	Actual Shown on Plans (%)
SOUTH- 19'	Unprotect, Sprinklered	75%	13%
NORTH- 0'	Unprotect, Sprinklered	Not Permitted	20% *
EAST- 7'	Unprotect, Sprinklered	25%	18%
WEST- 5'	Unprotect, Sprinklered	25%	0%

* Per local code enforcement, a variance has been granted to allow for openings and overhangs in this wall as indicated on plans

LIFE SAFETY SYSTEM REQUIREMENTS: Chapters 9 and 10

This section is required to be completed for all projects

Emergency Lighting: S1006 ☐ No ☒ Yes
Exit Signs: S1011 ☐ No ☒ Yes
Fire Alarm: S907(NFPA 72-2010) ☐ No ☒ Yes
Smoke Detection Systems: S907 ☒ No ☐ Yes ☐ Partial_____
Panic Hardware: S1008.1.10 ☒ No ☐ Yes
Life Safety Systems Generator: S2702.2 ☒ No ☐ Yes

LIFE SAFETY PLAN REQUIREMENTS:

Life Safety Plan Sheet #, if Provided: A0.11 & A0.12

☐ Fire and/or smoke rated wall locations (Chapter 7)
☒ Assumed and real property line locations
☒ Exterior wall opening area with respect to distance to assumed property lines (705.8)
☐ Existing structures within 30' of the proposed building
☒ Occupancy types for each area as it relates to occupant load calculation (Table 1004.1.1)
☒ Occupant loads for each area
☒ Exit access travel distances (1016)
☒ Common path of travel distances (1014.3 & 1028.8)
☒ Dead end lengths (1018.4)
☒ Clear exit widths for each exit door
☒ Maximum calculated occupant load capacity each exit door can accommodate based on egress width (1005.1)
☒ Actual occupant load for each exit door
☐ A separate schematic plan indicating where fire rated floor/ceiling and/or roof structure is provided for purposes of occupancy separation
☐ Location of doors with panic hardware (1008.1.10)
☐ Location of doors with delayed egress locks and the amount of delay (1008.1.9.7)
☐ Location of doors with electromagnetic egress locks (1008.1.9.8)
☐ Location of doors equipped with hold-open devices
☐ Location of emergency escape windows (1029)
☐ The square footage of each fire area (902)
☐ The square footage of each smoke compartment (407.4)
☐ Note any code exceptions or table notes that may have been utilized regarding the items above

EXIT REQUIREMENTS

This section is required to be completed for all projects

NUMBER AND ARRANGEMENT OF EXITS

Floor, Room or Space Designation	Minimum Number of Exits: Required T1021.2	Minimum Number of Exits: Shown on Plans	Travel Distance: Allowable Travel Distance (table 1016.1)	Travel Distance: Actual Travel Distance Shown on Plans	Arrangement Means of Egress (Section 1015.2): Required Distance Between Exit Doors	Arrangement Means of Egress (Section 1015.2): Actual Distance Shown on Plans
BUSINESS SHELL LVL 1	1	1	100 FT	100'	N/A	N/A
BUSINESS SHELL LVL 2	2	2	100 FT	75'	33'	33'

1. Corridor dead ends (section 1018.4)
2. Building with single exits (Tables 1021.2). Spaces with one means of egress (Table 1015.1)
3. Common Path of Travel (Section 1014.3)

OCCUPANT LOAD AND EXIT WIDTH

USE GROUP OR SPACE DESCRIPTION	(a) AREA (sq. ft.)	(b) AREA PER OCCUPANT	(1004.1.1) CALCULATED OCCUPANT LOAD (a/b)	(c) EGRESS WIDTH PER OCCUPANT (section 1005.1) STAIR	(c) EGRESS WIDTH PER OCCUPANT (section 1005.1) LEVEL	EXIT WIDTH (in) REQUIRED WIDTH (section 1005.1) (a/b) X c STAIR	EXIT WIDTH (in) REQUIRED WIDTH (section 1005.1) (a/b) X c LEVEL	EXIT WIDTH (in) ACTUAL WIDTH SHOWN ON PLANS STAIR	EXIT WIDTH (in) ACTUAL WIDTH SHOWN ON PLANS LEVEL
Business Shell- Lvl 1	3,230	100 SF	33 OCCUPANTS	N/A	0.2	N/A	6.6"	N/A	34"
Business Shell- Lvl 2	2,846	100 SF	29 OCCUPANTS	0.3	0.2	.87"	5.8"	46"	64""

1. Corridor dead ends (section 1018.4)
2. Building with single exits (Tables 1021.2). Spaces with one means of egress (Table 1015.1)
3. Common Path of Travel (Section 1014.3)

ACCESSIBLE DWELLING UNITS:

Total Units	Accessible Units Req'd	Type A Units Req'd	Type A Units Provided	Type B Units Req'd	Type B Units Provided	Total Accessible Units Provided
			N/A			

PLUMBING FIXTURES: Chapter 29

Occupancy Use Group and/or Space Designation		Waterclosets: Male	Waterclosets: Female	Urinals	Lavatories: Male	Lavatories: Female	Showers/ Tubs	Drinking Fountains: Regular	Drinking Fountains: Accessible
LVL 1									
	Provided	1	2	1	2	2			1
	Required	1	1		1	1			1
LVL 2									
	Provided	1	2	1	2	2			1
	Required	1	1		1	1			1

ACCESSIBLE PARKING REQUIREMENTS:

Lot or Parking Area	Total Number of Parking Spaces: Required	Total Number of Parking Spaces: Provided	# of Accessible Spaces Provided: Regular with 5' Access Aisle	# of Accessible Spaces Provided: Van Spaces with 8' Access Aisle	Total # Accessible Provided
EXISTING					
TOTAL					

Note: one out of every six accessible parking spaces shall be for van accessible parking.

SPECIAL APPROVALS

Special approval: (Local Jurisdiction, Department of Insurance, OSC, DPI, DHHS, ICC, etc., describe below)
N/A

STATEMENT OF SPECIAL INSPECTION:

☒ No special inspections required for this project ☐ Special inspections required

The following sheets comprise the required schedule of Special Inspections for this project. The construction divisions which require special inspections for this project are as follows:

☐ IT-1 Verification of Soils
☐ IT-2 Excavation and Fill
☐ IT-3 Piling and Drilling Piers
☐ IT-4 Modular Retaining Walls
☐ IT-5 Reinforced Concrete
☐ IT-6 Post Tension Slab
☐ IT-7 Pre-cast Concrete Erection
☐ IT-8 Pre-stressed Concrete
☐ IT-9 Inspection of Pre-Cast Fabricators
☐ IT-10 Inspection of Structural Steel Fabricators
☐ IT-11 Structural Masonry
☐ IT-12 Welding
☐ IT-13 High Strength Bolts & Steel Framing Insp.
☐ IT-14 Sprayed Fire-Resistance Materials
☐ IT-15 Exterior Insulation and Finish System
☐ IT-16 Seismic Resistance
☐ IT-17 Smoke Control
☐ IT-18 Detention Basin
☐ IT-19Special Cases

Check the above boxes for the special inspection required for this project and list below specific special inspections required under Chapter 17. For questions regarding Special Inspections please see www.Meck-SI.com.

STRUCTURAL DESIGN: SEE STRUCTURAL DRAWINGS

ENERGY SUMMARY:

This section for new construction, additions, change of use and interior completion

ENERGY REQUIREMENTS:
N/A - EXTERIOR WALLS AND ROOF ARE EXISTING TO REMAIN

ELECTRICAL SUMMARY: SEE ELECTRICAL DRAWINGS

MECHANICAL SUMMARY: SEE MECHANICAL DRAWINGS

ODA
overcash demmitt
2010 south tryon st. suite 1a
charlotte north carolina 28203
office.704.332.1615
web. www.oda.us.com

Kuester COMMERCIAL

Fort Mill Theater Renovation- Phase I

100 Main Street
Fort Mill, SC 29715

FOR CONSTRUCTION
ISSUE DATE: 04/08/16

No.	Description	Date
1	Permit Review Comments	05/25/16

APPENDIX B- CODE INFO

A0.10

Copyright 2016 Overcash Demitt Architects

ODA No. 152960

5/25/2016 8:47:13 AM

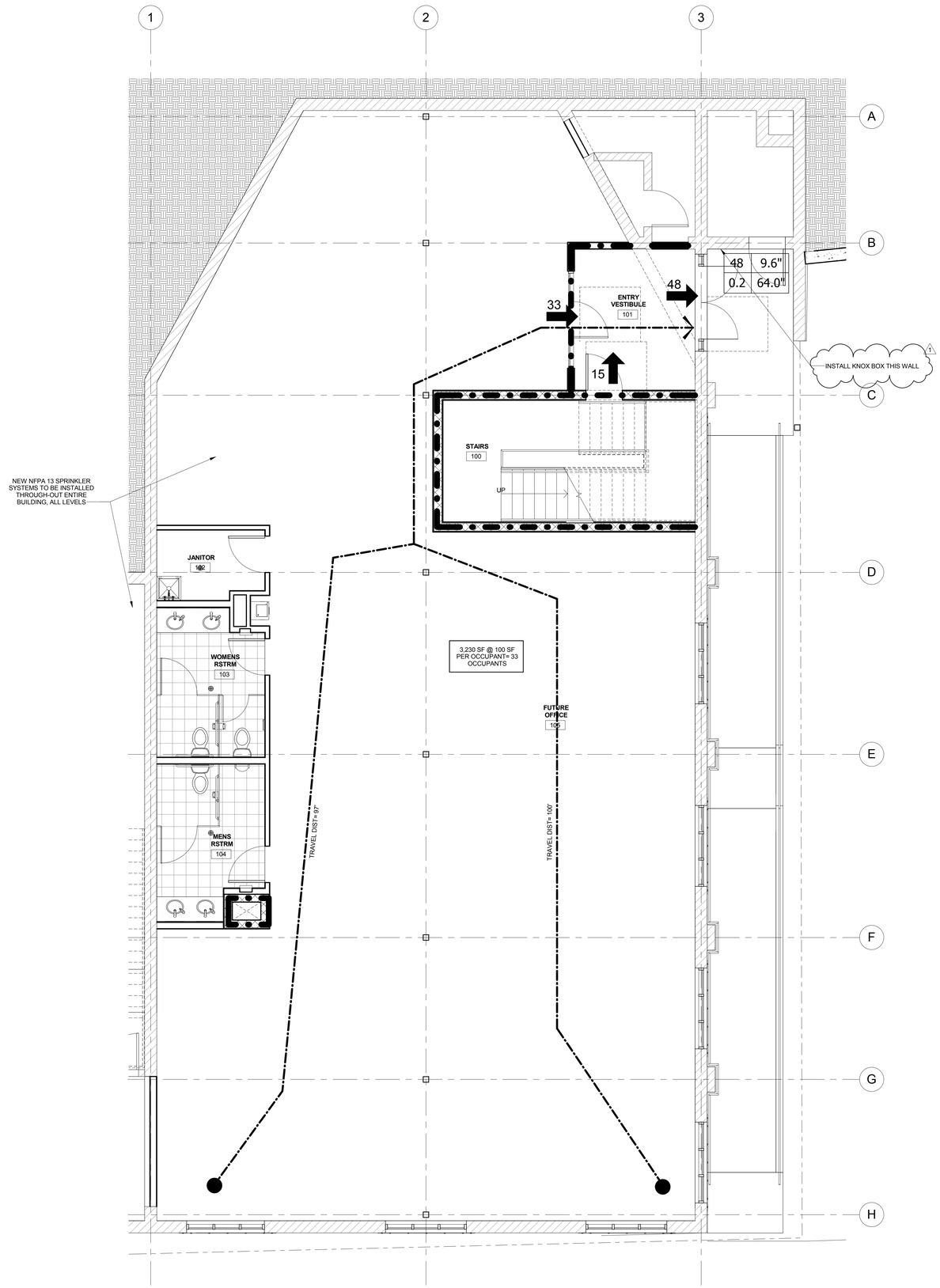

LIFE SAFETY LEGEND

45 TOTAL NUMBER OF OCCUPANTS AT EXIT

NUMBER OF OCCUPANTS — 45 | 13.5" — TOTAL WIDTH REQUIRED

MULTIPLIER PER 1005.1 — 0.3 | 44.0" — TOTAL WIDTH PROVIDED

COMMON PATH OF EGRESS TRAVEL

TRAVEL DISTANCE

WALL RATING LEGEND

NON RATED WALL

1 HOUR RATED WALL

SEE WALL TYPES ON SHEET A0.30

ODa
overcash demmitt
2010 south tryon st. suite 1a
charlotte north carolina 28203
office.704.332.1615
web. www.oda.us.com

STATE OF SOUTH CAROLINA
STEPHEN F. OVERCASH
CHARLOTTE, N. C.
5862
REGISTERED ARCHITECT
4-8-16

Kuester COMMERCIAL

Fort Mill Theater Renovation- Phase I

100 Main Street
Fort Mill, SC 29715

FOR CONSTRUCTION
ISSUE DATE: 04/08/16

No.	Description	Date
1	Permit Review Comments	05/25/16

LIFE SAFETY PLAN- LVL 1

A0.11

1 LEVEL 1 LIFE SAFETY PLAN — scale: 1/4" = 1'-0"

Copyright 2016 Overcash Demitt Architects
ODA No. 152960

5/25/2016 8:47:13 AM

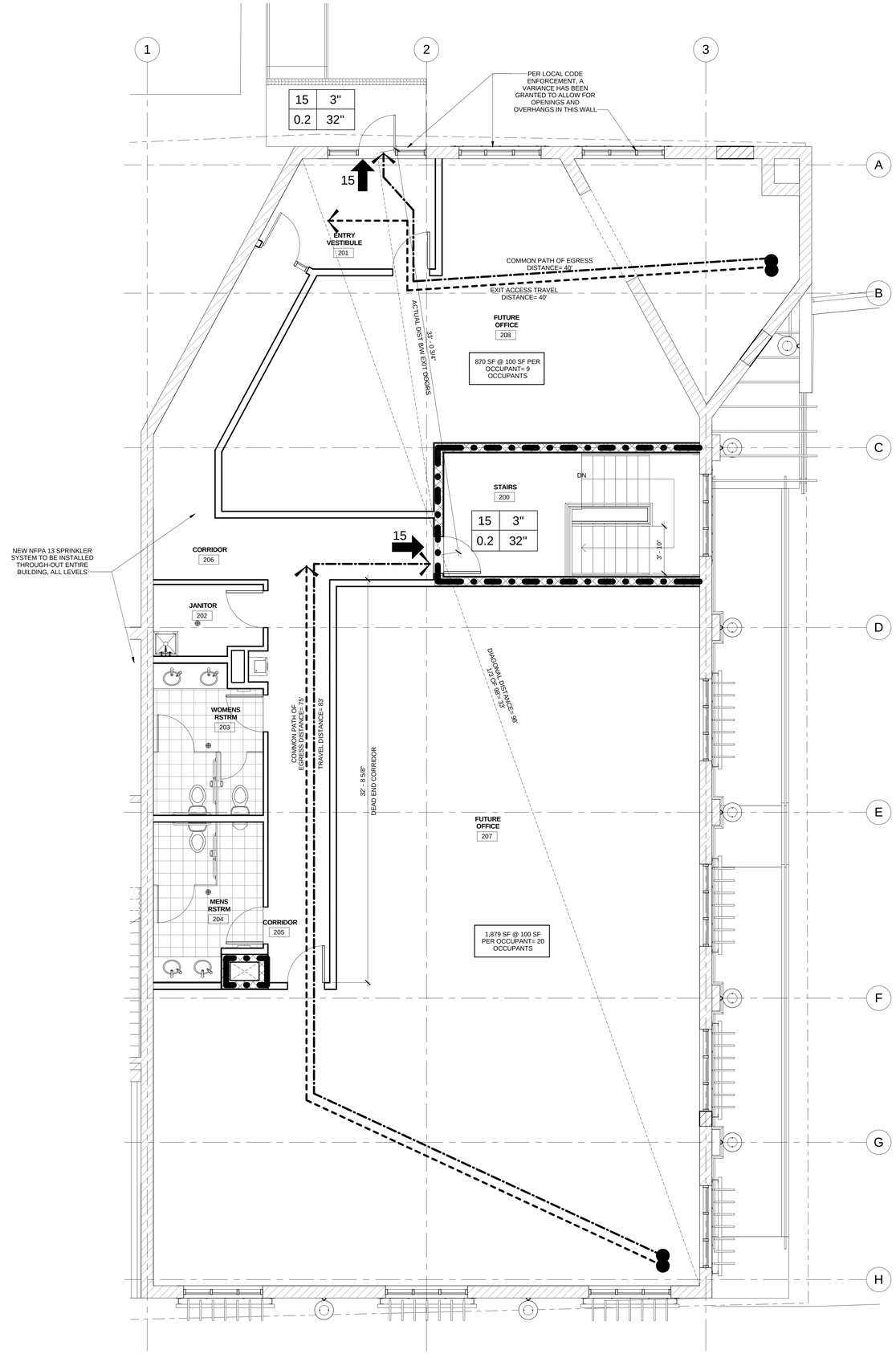

LIFE SAFETY LEGEND

45 TOTAL NUMBER OF OCCUPANTS AT EXIT

NUMBER OF OCCUPANTS — TOTAL WIDTH REQUIRED

45	13.5"
0.3	44.0"

MULTIPLIER PER 1005.1 — TOTAL WIDTH PROVIDED

COMMON PATH OF EGRESS TRAVEL

TRAVEL DISTANCE

WALL RATING LEGEND

NON RATED WALL

1 HOUR RATED WALL

SEE WALL TYPES ON SHEET A0.30

overcash demmitt
2010 south tryon st. suite 1a
charlotte north carolina 28203
office.704.332.1615
web. www.oda.us.com

STATE OF SOUTH CAROLINA
STEPHEN F. OVERCASH
CHARLOTTE, N. C.
SEAL
4-8-16

Kuester COMMERCIAL

Fort Mill Theater Renovation- Phase I

100 Main Street
Fort Mill, SC 29715

FOR CONSTRUCTION
ISSUE DATE: 04/08/16

No.	Description	Date

LIFE SAFETY PLAN- LVL 2

A0.12

1 NEW LEVEL 2 LIFE SAFETY PLAN — scale: 1/4" = 1'-0"

Copyright 2016 Overcash Demitt Architects
ODA No. 152960

4/11/2016 9:55:02 AM

3L. **Gypsum Board* —** (As an alternate to Item 3) For Direct Application to Studs Only- Nom 5/8 in. thick lead backed gypsum panels with beveled, square or tapered edges, applied vertically. Vertical joints centered over studs and staggered min 1 stud cavity on opposite sides of studs. Wallboard secured to studs with 1-5/8 in. long Type W coarse thread gypsum panel steel screws spaced 8 in. OC at perimeter and in the field. Lead batten strips required behind vertical joints of lead backed gypsum wallboard and optional at remaining stud locations. Lead batten strips, min 2 in. wide, max 10 ft long with a max thickness of 0.140 in. placed on the face of studs and attached to the stud with two 1 in. long Type S-8 pan head steel screws, one at the top of the strip and one at the bottom of the strip. Lead discs, max 5/16 in. diam by max 0.140 in. thick. compression fitted or adhered over the screw heads. Lead batten strips to have a purity of 99.5% meeting the Federal specification QQ-L-201f, Grades "B, C or D".
MAYCO INDUSTRIES INC — "X-Ray Shielded Gypsum"

3M. **Gypsum Board* —** (As an alternate to Items 3) For Direct Application to Studs Only- For use as the base layer or as the face layer. Nom 5/8 in. thick lead backed gypsum panels with beveled, square or tapered edges, applied vertically. Vertical joints centered over studs and staggered min 1 stud cavity on opposite sides of studs. Wallboard secured to studs with 1-5/8 in. long Type W coarse thread gypsum panel steel screws spaced 8 in. OC at perimeter and in the field when applied as the base layer. When applied as the face layer screw length to be increased to 2-1/2 in. Lead batten strips required behind vertical joints of lead backed gypsum wallboard and optional at remaining stud locations. Lead batten strips, min 2 in. wide, max 8 ft long with a max thickness of 0.14 in. placed on the face of studs and attached to the stud with construction adhesive and two 1 in. long Type S-12 pan head steel screws, one at the top of the strip and one at the bottom of the strip. Lead discs, nominal 3/8 in. diam by max 0.085 in. thick. Compression fitted or adhered over the screw heads. Lead batten strips and discs to have a purity of 99.9% meeting the Federal specification QQ-L-201f, Grade "C". Fasteners for face layer gypsum panels (Items 4, 4A or 4B) when installed over lead backed board to be min 2-1/2 in. Type S-12 bugle head steel screws spaced as described in Item 4.
RADIATION PROTECTION PRODUCTS INC — Type RPP - Lead Lined Drywall

3N. **Gypsum Board* —** (As an alternate to Item 3) — 5/8 in. thick, 4 ft. wide, applied vertically with vertical joints centered over studs and staggered one stud cavity on opposite sides of studs. Secured as described in Item 3.
CERTAINTEED GYPSUM INC — 5/8" Easi-Lite Type X (finish rating 24 min)

3O. **Wall and Partition Facings and Accessories* —** (As an alternate to Item 3, not shown) — Nominal 5/8 in. thick, 4 ft wide panels, applied vertically. Panels nailed 7 in. OC with 6d cement coated nails 1-7/8 in. long, 0.0915 in. shank diam and 15/64 in. diam heads. Panel joints covered with paper tape and two layers of joint compound. Nailheads covered with two layers of joint compound.
PABCO BUILDING PRODUCTS L L C, DBA PABCO GYPSUM — Type QuietRock 527 (finish rating 24 min).

3P. **Gypsum Board* —** (As an alternate to Item 3, not shown) - Two layers nom. 5/16 in. thick gypsum panels applied vertically or horizontally. Horizontal edge joints and horizontal butt joints on opposite sides of studs need not be staggered or backed by wood studs. Horizontal joints on the same side between face and base layers need not be staggered. Base layer gypsum panels fastened to studs with 1-1/4 in. long drywall nails spaced 8 in. OC. Face layer gypsum panels fastened to studs with 1-7/8 in. long drywall nails spaced 8 in. OC starting with a 4" stagger.
NATIONAL GYPSUM CO — Type FSW (finish rating 25 min)

3Q. **Gypsum Board* —** (As an alternate to Item 3) — 5/8 in. thick gypsum panels, with beveled, square, or tapered edges, applied either horizontally or vertically. Gypsum panels fastened to framing with 1-1/4 in. long Type W coarse thread gypsum panel steel screws spaced a maximum 10 in. OC with the last two screws 4 and 1 in. from the edges of the board. When used in widths other than 48 in., gypsum panels are to be installed horizontally.
CONTINENTAL BUILDING PRODUCTS OPERATING CO, L L C — Type LGFC6A (finish rating 21 min), Type LGFC2A, Type LGFC-C/A, Type LGFC-WD, Type LGLLX

4. **Steel Corner Fasteners — (Optional) —** For use at wall corners. Channel shaped, 2 in. long by 1 in. high on the back side with two 1/8 in. wide cleats protruding into the 5/8 in. wide channel, fabricated from 24 gauge galv steel. Fasteners applied only to the end or cut edge (not along tapered edges) of the gypsum board, no greater than 2 in. from corner of gypsum board, max spacing 16 in. OC. Nailed to adjacent stud through tab using one No. 6d cement coated nail per fastener. Corners of wall board shall be nailed to top and bottom plate using No. 6d cement coated nails.

5. **Batts and Blankets* —** (Optional - Required when Item 6A is used (RC-11)) Glass fiber or mineral wool insulation. Placed to completely or partially fill the stud cavities. When Item 6A is used, glass fiber or mineral wool insulation shall be friction-fitted to completely fill the stud cavities.
CERTAINTEED CORP
JOHNS MANVILLE INTERNATIONAL INC
KNAUF INSULATION LLC
MANSON INSULATION INC
OWENS CORNING HT INC, DIV OF OWENS CORNING — Corning Fiberglas Corp.
ROCK WOOL MANUFACTURING CO — Delta Board.
ROXUL INC — Acoustical Fire Batts
THERMAFIBER INC — Type SAFB.

5A. **Fiber, Sprayed* —** (Not shown - Not for use with Item 6) As an alternate to Batts and Blankets (Item 5) — Spray applied cellulose material. The fiber is applied with water to completely fill the enclosed cavity in accordance with the application instructions supplied with the product with a nominal dry density of 2.7 lb/ft^3. Alternate Application Method: The fiber is applied without water or adhesive at a nominal dry density of 3.5 lb/ft^3, in accordance with the application instructions supplied with the product. When Item 6B is used, Fiber, Sprayed shall be INS735, INS745, INS765LD or INS770LD.
U S GREENFIBER L L C — INS735 & INS745 for use with wet or dry application. INS510LD, INS515LD, INS541LD, INS735, INS745, INS765LD, and INS770LD are to be used for dry application only.

5B. **Fiber, Sprayed* —** (Not shown - Not for use with Item 6) As an alternate to Batts and Blankets (Item 5) and Item 5A - Spray applied cellulose insulation material. The fiber is applied with water to interior surfaces in accordance with the application instructions supplied with the product. Applied to completely fill the enclosed cavity. Minimum dry density of 4.2 pounds per cubic ft.
NU-WOOL CO INC — Cellulose Insulation

5C. **Batts and Blankets* —** Required for use with resilient channels, Item 7, 3 in. thick mineral wool batts, friction-fitted to fill interior of wall.
THERMAFIBER INC — Type SAFB

5D. **Glass Fiber Insulation —** (As an alternate to Item 5C) — 3 in. thick glass fiber batts bearing the UL Classification Marking as to Surface Burning and/or Fire Resistance, friction-fitted to fill the interior of the wall. See **Batts and Blankets** (BKNV or BZJZ) Categories for names of Classified companies.

5E. **Batts and Blankets* —** (Required for use with Wall and Partition Facings and Accessories, Item 3D) — Glass fiber insulation, nom 3-1/2 in. thick, min. density of 0.80 pcf, with a flame spread of 25 or less and a smoke developed of 50 or less, friction-fitted to completely fill the stud cavities. See Batts and Blankets Category (BKNV) for names of manufacturers.

5F. **Fiber, Sprayed* —** (Optional, Not Shown - Not for use with Item 6, 6A or 6B). As an alternate to Batts and Blankets (Item 5) and Item 5A - Spray applied granulated mineral fiber material. The fiber is applied with water to completely fill the enclosed cavity in accordance with the application instructions supplied with the product. See **Fiber, Sprayed** (CCAZ).
TEXAS AMERROCK PARTNERS L P, DBA AMERROCK PRODUCTS — Rockwool

5G. **Fiber, Sprayed* —** (Optional, Not Shown - Not for use with Items6, 6A or 6B). As an alternate to Batts and Blankets (Item 5) and Item 5A - Brown Colored Spray applied cellulose fiber. The fiber is applied with water to completely fill the enclosed stud cavity in accordance with the application instructions supplied with the product. The minimum dry density shall be 4.30 lbs/ft^3.
INTERNATIONAL CELLULOSE CORP — Celbar-RL

6. **Steel Framing Members (Optional, Not Shown)* —** Furring channels and Steel Framing Members as described below:
a. **Furring Channels —** Formed of No. 25 MSG galv steel. 2-9/16 in. or 2-23/32 in. wide by 7/8 in. deep, spaced 24 in. OC perpendicular to studs. Channels secured to studs as described in Item b. Ends of adjoining channels are overlapped 6 in. and tied together with double strand of No. 18 SWG galv steel wire near each end of overlap. As an alternate, ends of adjoining channels may be overlapped 6 in. and secured together with two self-tapping #6 framing screws, min. 7/16 in. long at the midpoint of the overlap, with one screw on each flange of the channel. Gypsum board attached to furring channels as described in Item 3. b. Steel Framing Members* — Used to attach furring channels (Item 6a) to studs. Clips spaced 48 in. OC. RSIC-1 and RSIC-1 (2.75) clips secured to studs with No. 8 x 2-1/2 in. coarse drywall screw through the center grommet. RSIC-V and RSIC-V (2.75) clips secured to studs with No. 8 x 1-1/2 in. coarse drywall screw through the center hole. Furring channels are friction fitted into clips. RSIC-1 and RSIC-V clips for use with 2-9/16 in. wide furring channels. RSIC-1 (2.75) and RSIC-V (2.75) clips for use with 2-23/32 in. wide furring channels.
b. **Steel Framing Members* —** Used to attach furring channels (Item 6a) to studs. Clips spaced 48 in. OC. RSIC-1 clips secured to studs with No. 8 x 2-1/2 in. coarse drywall screw through the center grommet. RSIC-V clips secured to studs with No. 8 x 1-1/2 in. coarse drywall screw through the center hole. Furring channels are friction fitted into clips.
PAC INTERNATIONAL INC — Types RSIC-1, RSIC-V, RSIC-1 (2.75), RSIC-V (2.75).

6A. **Steel Framing Members (Optional, Not Shown)* —** Furring channels and Steel Framing Members on one side of studs as described below:
a. **Furring Channels —** Formed of No. 25 MSG galv steel, spaced 24 in. OC perpendicular to studs. Channels secured to studs as described in Item b. Ends of adjoining channels are overlapped 6 in. and tied together with double strand of No. 18 SWG galv steel wire near each end of overlap. Batts and Blankets placed in stud cavity as described in Item 5. Two layers of gypsum board attached to furring channels as described in Item 3.
b. **Steel Framing Members* —** used to attach furring channels (Item 6Aa) to one side of studs only. Clips spaced 48 in. OC., and secured to studs with two No. 8 x 2-1/2 in. coarse drywall screws, one through the hole at each end of the clip. Furring channels are friction fitted into clips.
KINETICS NOISE CONTROL INC — Type Isomax.

6B. **Steel Framing Members —** (Optional, Not Shown)* — Furring channels and Steel Framing Members as described below:
a. **Furring Channels —** Formed of No. 25 MSG galv steel. 2-3/8 in. wide by 7/8 in. deep, spaced 24 in. OC perpendicular to studs. Channels secured to studs as described in Item b. Ends of adjoining channels are overlapped 6 in. and tied together with double strand of No. 18 SWG galv steel wire near each end of overlap. As an alternate, ends of adjoining channels may be overlapped 6 in. and secured together with two self-tapping #6 framing screws, min. 7/16 in. long at the midpoint of the overlap, with one screw on each flange of the channel. Gypsum board attached to furring channels as described in Item 3.
b. **Steel Framing Members* —** Used to attach furring channels (Item 6Ba) to studs. Clips spaced 48 in. OC. Genie clips secured to studs with No. 8 x 1-1/2 in. coarse drywall screw through the center hole. Furring channels are friction fitted into clips.
PLITEQ INC — Type Genie Clip

6C. **Steel Framing Members —** (Optional, Not Shown)* — Furring channels and resilient sound isolation clip as described below:
a. **Furring Channels —** Formed of No. 25 MSG galv steel. Spaced 24 in. OC perpendicular to studs. Channels secured to studs as described in Item b. Ends of adjoining channels overlapped 6 in. and secured together with four self-tapping No. 8x1/2 Self Drilling screws (2 per side 1 in. and 4 in. from overlap edge). Gypsum board attached to furring channels as described in Item 3. Side joint furring channels shall be attached to studs with RESILMOUNT Sound Isolation Clips located approximately 2 in. from each end of length of channel. Both Gypsum Boards at side joints fastened into channel with screws spaced 8 in. OC, approximately 1/2 in. from joint edge.
b. **Steel Framing Members* —** Resilient sound isolation clip used to attach furring channels (Item 6Ca) to studs. Clips spaced 16 in. OC., and secured to studs with No. 10 x 2-1/2 in. coarse drywall screw through the center hole. Furring channels are friction fitted into clips.
STUDCO BUILDING SYSTEMS — RESILMOUNT Sound Isolation Clips - Type A237 or A237R.

7. **Furring Channel —** Optional - Not Shown - For use on one side of the wall - Resilient channels, 25 MSG galv steel, spaced vertically 24 in. OC, flange portion screw attached to one side of studs with 1-1/4 in. long diamond shaped point, double lead Phillips head steel screws. When resilient channels are used, insulation, Items 5C or 5D is required.

8. **Caulking and Sealants —** (not shown, optional) A bead of acoustical sealant applied around the partition perimeter for sound control.

9. **STC Rating —** The STC Rating of the wall assembly is 56 when it is constructed as described by Items 1 through 6, except:
A. Item 2, above - Nailheads Shall be covered with joint compound.
B. Item 2, above - Joints As described, shall be covered with fiber tape and joint compound.
C. Item 5, above - Batts and Blankets* The cavities formed by the studs shall be friction fit with R-19 unfaced fiberglass insulation batts measuring 6-1/4 in. thick and 15-1/4 in. wide.
D. Item 6, above - Steel Framing Members* Type RSIC-1 clips shall be used to attach gypsum board to studs on either side of the wall assembly.
E. Item 8, above - Caulking and Sealants (not shown) A bead of acoustical sealant shall be applied around the partition perimeter for sound control.
F. Steel Corner Fasteners (Item 4), Fiber, Sprayed (Items 5A and 5B) and Steel Framing Members (Item 6A), not evaluated as alternatives for obtaining STC rating.

10. **Wall and Partition Facings and Accessories* —** (Optional, Not shown) — Nominal 1/2 in. thick, 4 ft wide panels, for optional use as an additional layer on one or both sides of the assembly. Panels attached in accordance with manufacturer's recommendations. When the QR-500 or QR-510 panel is installed between the wood framing and the UL Classified gypsum board, the required UL Classified gypsum board layer(s) is/are to be installed as indicated as to fastener type and spacing, except that the required fastener length shall be increased by a minimum of 1/2 in. Not evaluated or intended as a substitute for the required layer(s) of UL Classified Gypsum Board.
PABCO BUILDING PRODUCTS L L C, DBA PABCO GYPSUM — Type QuietRock QR-500 and QR-510

11. **Cementitious Backer Units* —** (Optional Item Not Shown - For Use On Face Of 1 Hr Systems With All Standard Items Required) - 7/16 in., 1/2 in., 5/8 in., 3/4 in. or 1 in. thick, min. 32 in. wide.- Applied vertically or horizontally with vertical joints centered over studs. Fastened to studs and runners with cement board screws of adequate length to penetrate stud by a minimum of 3/8 in. for steel framing members, and a minimum of 3/4 in. for wood framing members spaced a max of 8 in. OC. When 4 ft. wide boards are used, horizontal joints need not be backed by framing.
NATIONAL GYPSUM CO — Type DuraBacker, PermaBase, DuraBacker Plus, or PermaBase Plus

12. **Non-Bearing Wall Partition Intersection —** (Optional) —Two nominal 2 by 4 in. studs or nominal 2 by 6 in. studs nailed together with two 3 in. long 10d nails spaced a max. 16 in. OC. vertically and fastened to one side of the minimum 2 by 4 in. stud with 3 in. long 10d nails spaced a max. 16 in. OC. vertically. Intersection between partition wood studs to be flush with the 2 by 4 in. studs. The wall partition wood studs are to be framed by with a second 2 by 4 in. wood stud fastened with 3 in. long 10d nails spaced a max. 16 in. OC. vertically. Maximum one non-bearing wall partition intersection per stud cavity. Non-bearing wall partition stud depth shall be at a minimum equal to the depth of the bearing wall.

13. **Mesh Netting —** (Not shown) - Any thin, woven or non-woven fibrous netting material attached with staples to the outer face of one row of studs to facilitate the installation of the sprayed fiber from the opposite row.

14. **Mineral and Fiber Board* —** (Optional, Not shown) — For optional use as an additional layer on one side of wall. Nom 1/2 in. thick, 4 ft wide with long dimension parallel and centered over studs. Attached to framing with 2 in. long Type W steel screws, spaced 12 in. OC. The required UL Classified gypsum board layer(s) is/are to be installed as indicated as to fastener type and spacing, except that the required fastener length shall be increased by a minimum of 1/2 in. Not evaluated or intended as a substitute for the required layer(s) of UL Classified Gypsum Board.
HOMASOTE CO — Homasote Type 440-30

14A. **Mineral and Fiber Board* —** (Optional, Not shown) — For use with Items 14B-14E) — For optional use as an additional layer on one side of wall. Nom 1/2 in. thick, 4 ft wide with long dimension parallel and centered over studs. Attached to framing with minimum 1-3/8 in. long ring shanked nails or 1-1/4 in. long Type W steel screws, spaced 12 in. OC along board edges and 24 in. OC in field of board along intermediate framing. Not evaluated or intended as a substitute for the required layer(s) of UL Classified Gypsum Board.
HOMASOTE CO — Homasote Type 440-32

14B. **Glass Fiber Insulation —** (For use with Item 14A) — 3-1/2 in. thick glass fiber batts bearing the UL Classification Marking as to Surface Burning and/or Fire Resistance, placed to fill the interior of the wall. See Batts and Blankets (BKNV or BZJZ) categories for names of Classified companies.

14C. **Batts and Blankets* —** (As an alternate to Item 14B, For use with Item 14A), 3 in. thick mineral wool batts, placed to fill interior of wall, attached to the 3-1/2 in. face of the studs with staples placed 24 in. OC.
THERMAFIBER INC — Type SAFB

14D. **Adhesive —** (For use with Item 14A) - Construction grade adhesive applied in vertical, serpentine, nominal 3/8 in. wide beads down the length of both vertical edges of Mineral and Fiber Board (Item 14A).

14E. **Gypsum Board* —** (For use with Item 14A) - 5/8 in. thick, 4 ft wide, applied vertically over Mineral and Fiber Board (Item 14A) with vertical joints located anywhere over stud cavities. Secured to mineral and fiber boards with 1-1/2 in. Type G Screws spaced 8 in. OC along edges of each vertical joint and 12 in. OC in intermediate field of the Mineral and Fiber Board (Item 14A). Secured to outermost studs and bearing plates with 2 in. long Type S screws spaced 8 in. OC. Gypsum Board joints covered with paper tape and joint compound. Screw heads covered with joint compound. Finish Rating 30 Min.
AMERICAN GYPSUM CO — Type AG-C
CERTAINTEED GYPSUM INC — Type FRPC, Type C
CGC INC — Types C, IP-X2, IPC-AR
CONTINENTAL BUILDING PRODUCTS OPERATING CO, L L C — Type LGFC-C/A
GEORGIA-PACIFIC GYPSUM L L C — Types S, DAPC, TG-C
NATIONAL GYPSUM CO — Types FSK-C, FSW-C
PABCO BUILDING PRODUCTS L L C, DBA PABCO GYPSUM — Type PG-C.
PANEL REY S A — Type PRC
THAI GYPSUM PRODUCTS PCL — Type C
UNITED STATES GYPSUM CO — Types C, IP-X2, IPC-AR
USG BORAL ZAWAWI DRYWALL L L C SFZ — Type C
USG MEXICO S A DE C V — Types C, IP-X2, IPC-AR

Design No. U905
September 11, 2015

Bearing Wall Rating — 2 HR.

Nonbearing Wall Rating — 2 HR

s design was evaluated using a load design method other than the Limit States Design Method (e.g., Working Stress Design Method). For jurisdictions employing the Limit States Design Method, such as Canada, a load restriction factor shall be used — See Guide BXUV or BXUV7

ndicates such products shall bear the UL or cUL Certification Mark for jurisdictions employing the UL or cUL Certification (such as Canada), respectively.

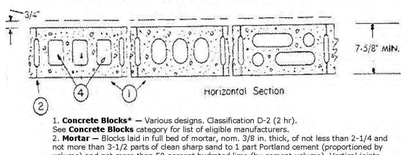

1. **Concrete Blocks* —** Various designs. Classification D-2 (2 hr).
See **Concrete Blocks** category for list of eligible manufacturers.
2. **Mortar —** Blocks laid in full bed of mortar, nom. 3/8 in. thick, of not less than 2-1/4 and not more than 3-1/2 parts of clean sharp sand to 1 part Portland cement (proportioned by volume) and not more than 50 percent hydrated lime (by cement volume). Vertical joints staggered.
3. **Portland Cement Stucco or Gypsum Plaster —** Add 1/2 hr to classification if used. Where combustible members are framed in wall, plaster or stucco must be applied on the face opposite framing to achieve a max. Classification of 1-1/2 hr. Attached to concrete blocks (Item 1).
4. **Loose Masonry Fill —** If all core spaces are filled with loose dry expanded slag, expanded clay or shale (Rotary Kiln Process), water repellant vermiculite masonry fill insulation, or silicone treated perlite loose fill insulation add 2 hr to classification.
5. **Foamed Plastic* —** (Optional-Not Shown) — 1-1/2 in. thick max, 4 ft wide sheathing attached to concrete blocks (Item 1).
ATLAS ROOFING CORP — "EnergyShield Pro Wall Insulation" and "EnergyShield Pro 2 Wall Insulation"
CARLISLE COATINGS & WATERPROOFING INC — Type R2+ Sheath
HUNTER PANELS — Types Xci-Class A, Xci 286
RMAX OPERATING L L C — "TSX-8500", "TSX-8510", "Thermasheath-XP", "ECOMAXci", "Thermasheath-3", "Duraspheath-3"
THE DOW CHEMICAL CO — Types Thermax Sheathing, Thermax Light Duty Insulation, Thermax Heavy Duty Insulation, Thermax Metal Building Board, Thermax White Finish Insulation, Thermax ci Exterior Insulation, Thermax XARMOR ci Exterior Insulation, Thermax IH Insulation, Thermax Plus Liner Panel, Thermax Heavy Duty Plus (HDP) and TUFF-R™ ci Insulation

5A. **Building Units —** As an alternate to Items 5, min. 1-in thick polyisocyanurate composite foamed plastic insulation boards, nom. 48 by 48 or 96 in.
RMAX OPERATING L L C — "Thermasheath-SI", "ECOBASEci", "ThermaBase-CI"

2012 IBC CHAPTER 7
TABLE 721.1(2) RATED FIRE-RESISTANCE PERIODS FOR VARIOUS WALLS AND PARTITIONS[a, q, p]

MATERIAL	ITEM NUMBER	CONSTRUCTION	MINIMUM FINISHED THICKNESS FACE-TO-FACE[b] (inches)			
			4 hours	3 hours	2 hours	1 hour
1. Brick of clay or shale	1-1.1	Solid brick of clay or shale[c].	6	4.9	3.8	2.7
	1-1.2	Hollow brick, not filled.	5.0	4.3	3.4	2.3
	1-1.3	Hollow brick unit wall, grout or filled with perlite vermiculite or expanded shale aggregate.	6.6	5.5	4.4	3.0
	1-2.1	4" nominal thick units at least 75 percent solid backed with a hat-shaped metal furring channel $^3/_4$" thick formed from 0.021" sheet metal attached to the brick wall on 24" centers with approved fasteners, and $^1/_2$" Type X gypsum wallboard attached to the metal furring strips with 1"-long Type S screws spaced 8" on center.	—	—	5[d]	—

TABLE 721.1(2)—continued RATED FIRE-RESISTANCE PERIODS FOR VARIOUS WALLS AND PARTITIONS[a, q, p]

MATERIAL	ITEM NUMBER	CONSTRUCTION	MINIMUM FINISHED THICKNESS FACE-TO-FACE[b] (inches)			
			4 hours	3 hours	2 hours	1 hour
15. Exterior or interior walls (continued)	15-1.13[q]	2" × 6" wood studs at 16" with double top plates, single bottom plate; interior and exterior sides covered with $^5/_8$" Type X gypsum wallboard, 4'wide, applied vertically with all joints over framing or blocking and fastened with $2^1/_4$" Type S drywall screws, spaced 12" on center. R-19 mineral fiber insulation installed in stud cavity.	—	—	—	$6^3/_4$
	15-1.14[q]	2" × 6" wood studs at 16" with double top plates, single bottom plate; interior and exterior sides covered with $^5/_8$" Type X gypsum wallboard, 4'wide, applied horizontally or vertically with vertical joints over studs, and fastened with $2^1/_4$" Type S drywall screws, spaced 7" on center.	—	—	—	$6^3/_4$
	15-1.15[q]	2" × 4" wood studs at 16" with double top plates, single bottom plate; interior and exterior sides covered with $^5/_8$" Type X gypsum wallboard and sheathing, respectively, 4'wide, applied horizontally or vertically with vertical joints over studs, and fastened with $2^1/_4$" Type S drywall screws, spaced 12" on center. Cavity to be filled with $3^1/_2$" mineral wool insulation.	—	—	—	$4^3/_4$
	15-1.16[q]	2"x 6" wood studs at 24" center with double top plates, single bottom plate; interior and exterior side covered with two layers of $^5/_8$" Type X gypsum wallboard, 4' wide, applied horizontally with vertical joints over studs. Base layer fastened with $2^1/_4$" Type S drywall screws, spaced 24" on center and face layer fastened with Type S drywall screws, spaced 8" on center, wallboard joints covered with paper tape and joint compound, fastener heads covered with joint compound. Cavity to be filled with $5^1/_2$" mineral wool insulation.	—	—	8	—
		$3^5/_8$" No. 16 gage steel studs at 24" on center or 2" × 4" wood studs at 24" on center. Metal lath attached to the exterior side of studs with minimum 1" long No. 6 drywall screws at 6" on center and covered with minimum $^3/_4$" thick Portland cement plaster. Thin veneer brick units of				

q. The design stress of studs shall be equal to a maximum of 100 percent of the allowable F'c, calculated in accordance with Section 2306.

ODa
overcash demmitt
2010 south tryon st. suite 1a
charlotte north carolina 28203
office.704.332.1615
web. www.oda.us.com

Kuester
COMMERCIAL

Fort Mill Theater Renovation-Phase I

100 Main Street
Fort Mill, SC 29715

FOR CONSTRUCTION
ISSUE DATE: 04/08/16

No.	Description	Date

UL ASSEMBLIES

A0.13

Copyright 2016 Overcash Demitt Architects
ODA No. 152960

4/8/2016 8:30:40 AM

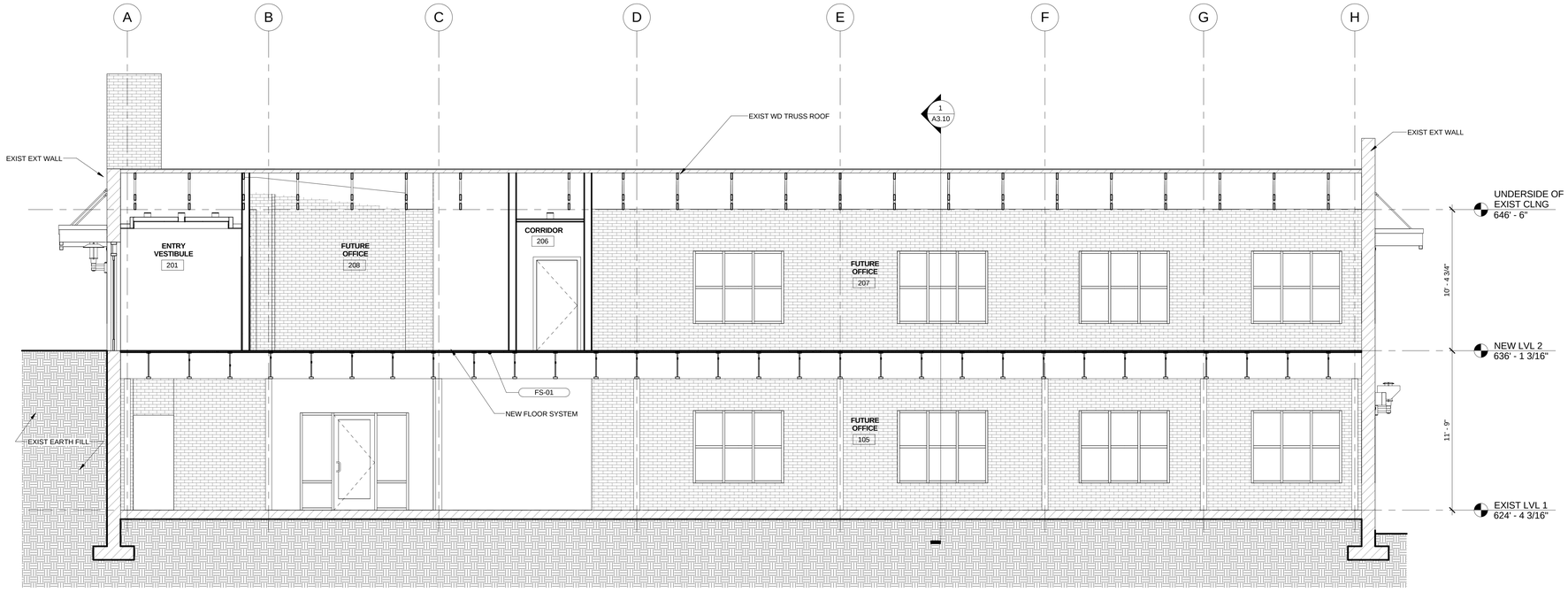

2 BUILDING SECTION B

scale: 1/4" = 1'-0"

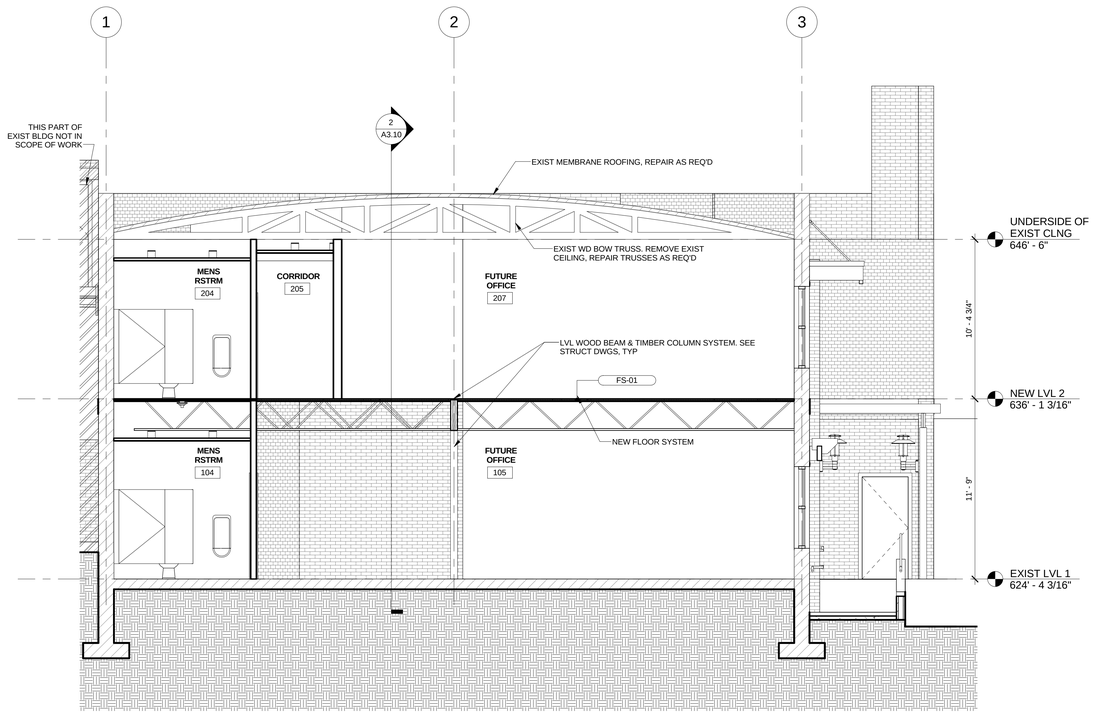

1 BUILDING SECTION A

scale: 1/4" = 1'-0"

4/8/2016 8:36:27 AM

ODa
overcash demmitt
2010 south tryon st. suite 1a
charlotte north carolina 28203
office.704.332.1615
web. www.oda.us.com

STATE OF SOUTH CAROLINA
STEPHEN F. OVERCASH
CHARLOTTE, N. C.
4-8-16

Kuester COMMERCIAL

Fort Mill Theater Renovation-Phase I

100 Main Street
Fort Mill, SC 29715

FOR CONSTRUCTION
ISSUE DATE: 04/08/16

No.	Description	Date

RENOVATED BUILDING SECTIONS

A3.10

Copyright 2016 Overcash Demitt Architects
ODA No. 152960

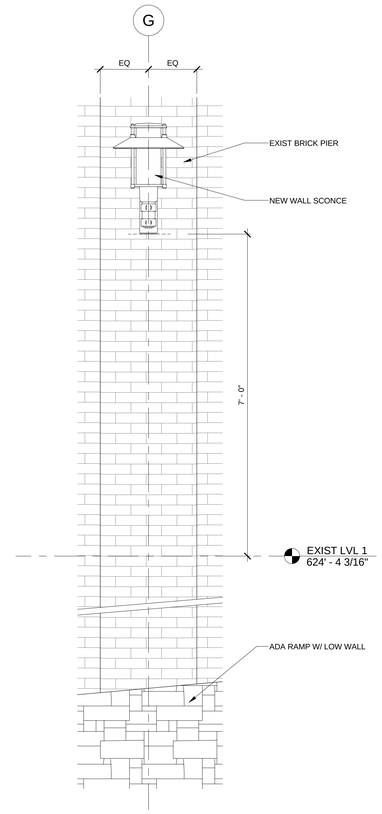

4 WALL SCONCE ELEV DTL scale: 3/4" = 1'-0"

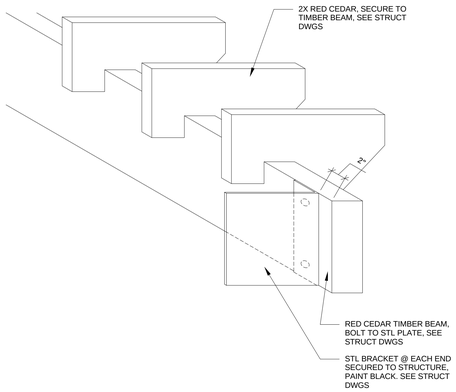

3 WD BRACKET PERSPECTIVE scale: 1 1/2" = 1'-0"

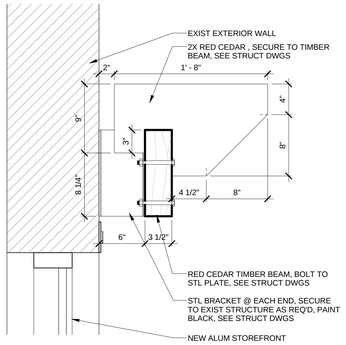

2 WD BRACKET DETAIL scale: 1 1/2" = 1'-0"

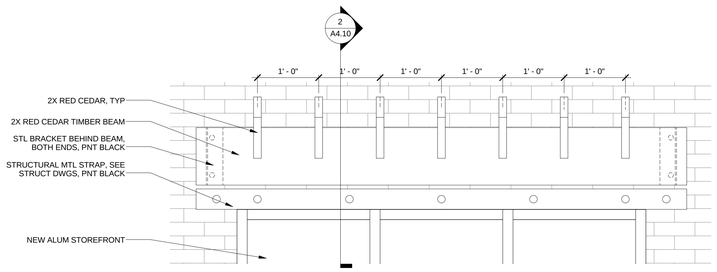

1 ENLARGED WD BRACKET ELEVATION scale: 1" = 1'-0"

4/8/2016 8:36:26 AM

ODa
overcash demmitt
2010 south tryon st. suite 1a
charlotte north carolina 28203
office.704.332.1615
web. www.oda.us.com

Kuester COMMERCIAL

Fort Mill Theater Renovation-Phase I

100 Main Street
Fort Mill, SC 29715

FOR CONSTRUCTION
ISSUE DATE: 04/08/16

No.	Description	Date

PLAN AND ELEVATION DETAILS

A4.10

Copyright 2016 Overcash Demitt Architects
ODA No. 152960

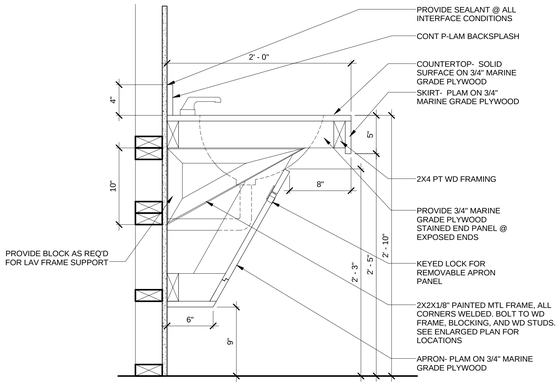

8 TYP LAVATORY SECTION — scale: 1 1/2" = 1'-0"

RCP LEGEND

- 5/8" GYPSUM BOARD CEILING- PAINT
- WHITE 2X2 SUSPENDED CEILING GRID WITH WHITE FINE TEXTURE TEGULAR EDGE CEILING TILES
- 2X2 RECESSED LIGHT FIXTURE
- RECESSED CAN LIGHT FIXTURE
- WALL MOUNTED LIGHT FIXTURE

TOILET ACCESORY SCHEDULE	
Type Mark	Description
TA-1	Bobrick B-43944 Recessed Paper Towel Dispenser And Waste Receptacle
TA-2	Bobrick B-828 Counter Mounted Automatic Foam Soap Dispenser
TA-3	Bobrick B-4288 Surface Mounted Multi-roll Toilet Tissue Dispenser
TA-4	1 1/4" Diameter Stainless Steel Grab Bars with Snap Flange
TA-5	1 1/4" Diameter Stainless Steel Grab Bars with Snap Flange
TA-6	1 1/4" Diameter Stainless Steel Grab Bars with Snap Flange
TA-7	Bobrick B-290 1836 Welded Frame Mirror
TA-8	Bobrick B-254 Surface Mounted Sanitary Napkin Disposal
TA-9	Bobrick B-353 Recessed Sanitary Napkin Disposal
TA-10	Caxton® undercounter lavatory
TA-11	Selectronic Integrated Electronic Proximity Lavatory Faucet

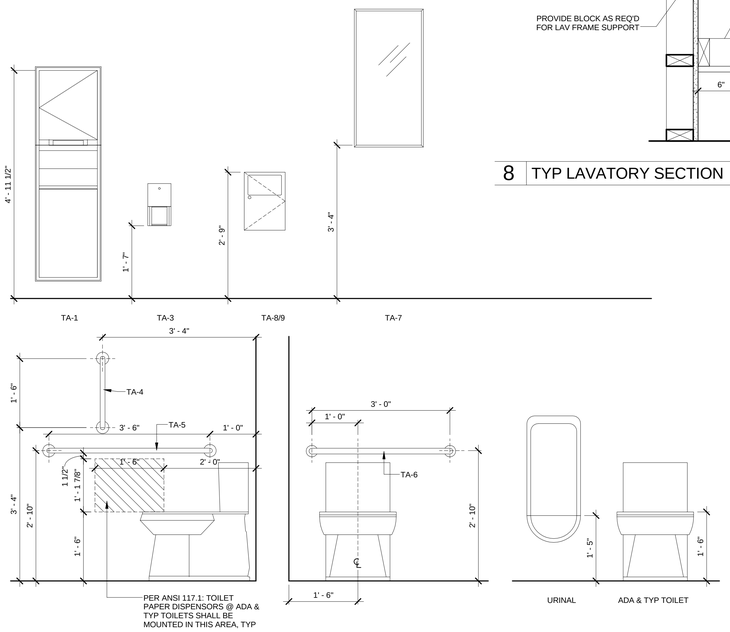

7 TYP MOUNTING HEIGHTS — scale: 3/4" = 1'-0"

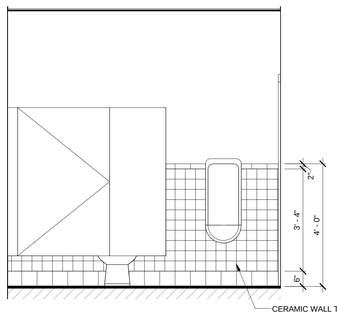

6 RSTRM ELEV C — scale: 1/2" = 1'-0"

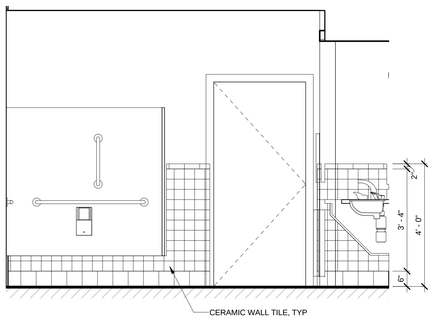

5 RSTRM ELEV D — scale: 1/2" = 1'-0"

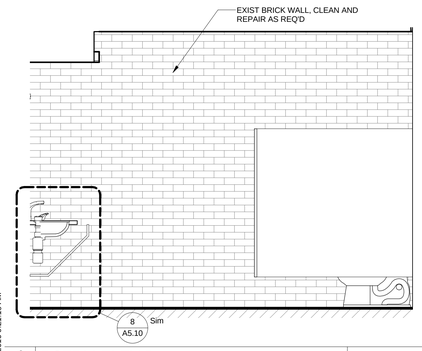

4 RSTRM ELEV B — scale: 1/2" = 1'-0"

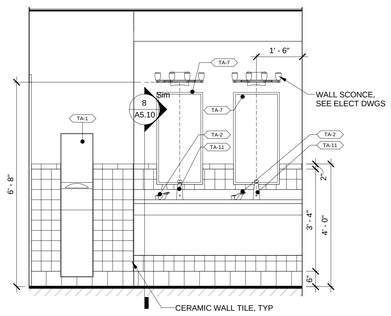

3 RSTRM ELEV A — scale: 1/2" = 1'-0"

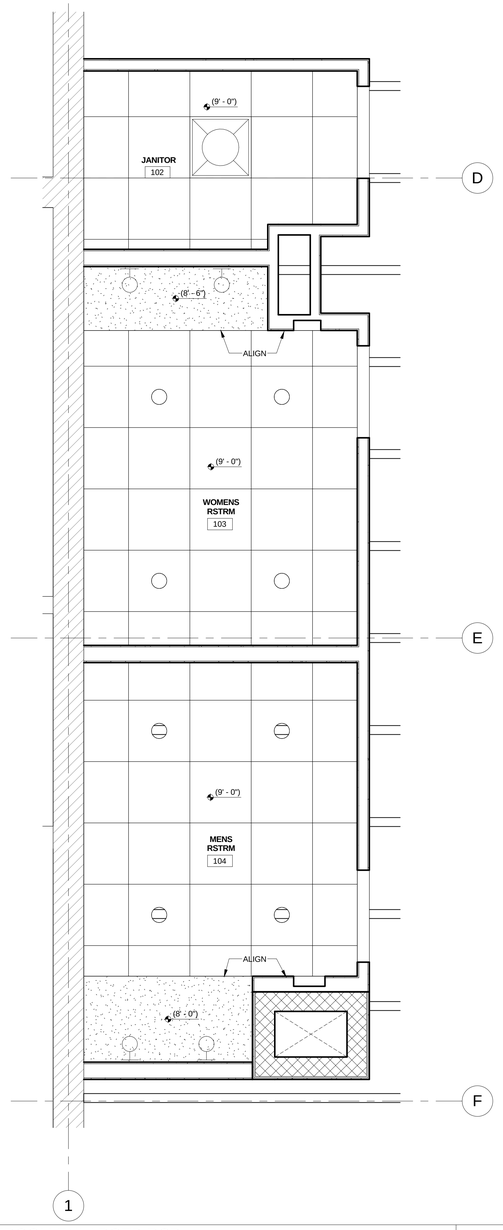

2 TYP RESTROOM ENLARGED RCP — scale: 1/2" = 1'-0"

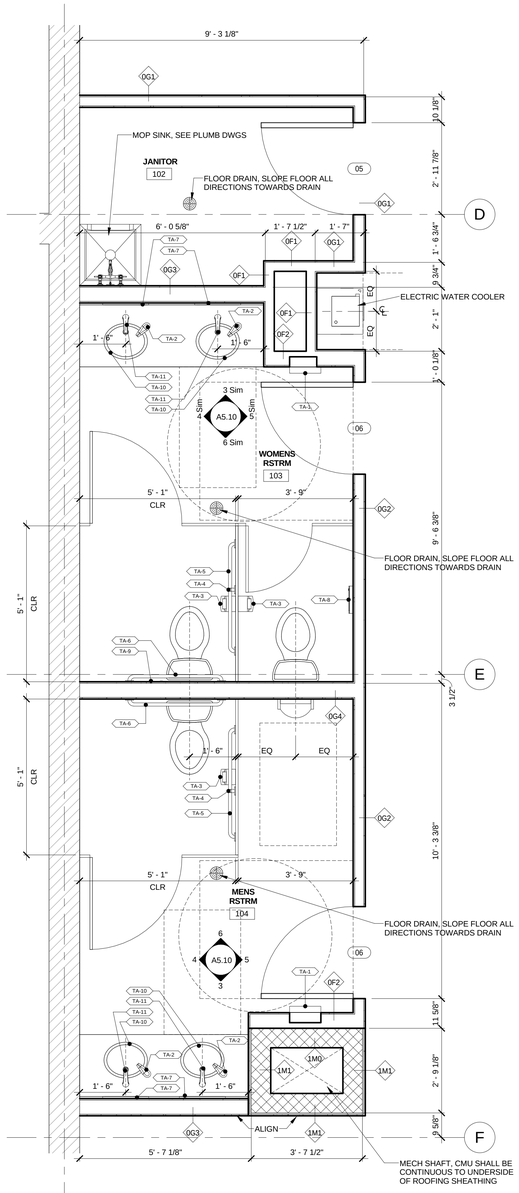

1 TYP RESTROOM ENLARGED PLAN — scale: 1/2" = 1'-0"

ODa
overcash demmitt
2010 south tryon st. suite 1a
charlotte north carolina 28203
office.704.332.1615
web. www.oda.us.com

STATE OF SOUTH CAROLINA — STEPHEN F. OVERCASH, CHARLOTTE, N. C. 28203 — REGISTERED ARCHITECT — 4-8-16

Kuester COMMERCIAL

Fort Mill Theater Renovation- Phase I

100 Main Street
Fort Mill, SC 29715

FOR CONSTRUCTION
ISSUE DATE: 04/08/16

No.	Description	Date

ENLARGED RESTROOM PLANS, ELEV, & DETAILS

A5.10

Copyright 2016 Overcash Demitt Architects
ODA No. 15Z960

4/11/2016 9:21:19 AM

DOOR SCHEDULE

MARK	DOOR						FRAME					LABEL	HW SET NO.	COMMENTS
	SIZE			DOOR TYPE	MATL	DOOR FINISH	TYPE ELEV	MATL	FINISH	DETAIL				
	PAIR	W	H							HEAD	JAMB			
00		3' - 0"	6' - 8"	A	HM	PNT	A	HM	PNT	1/A6.10 SIM	1/A6.10 SIM	--	--	DOOR TO BE INSULATED. PROVIDE ADA COMPLIANT HARDWARE AND LOCK, THRESHOLD, & SEALS
01	Y	6' - 0"	7' - 0"	B	ALUM	ALUM	SF	ALUM	SF	PER SF MANUF	PER SF MANUF	--	--	PROVIDE ADA COMPLIANT PUSH & OFFSET DOOR PULL COMBO, CLOSURE, LOCK, THRESHOLD, SWEEP, & SEALS. DOOR SHALL REMAIN OPERABLE ON EGRESS SIDE WHEN LOCKED
02		3' - 0"	7' - 0"	B	ALUM	ALUM	A	ALUM	SF	PER SF MANUF	PER SF MANUF	60 MIN	--	PROVIDE ADA COMPLIANT HARDWARE & EXTERIOR LOCK. DOOR SHALL REMAIN OPERABLE FROM EGRESS SIDE WHEN LOCKED
03		3' - 0"	6' - 8"	A	HM	PNT	A	HM	PNT	1/A6.10	1/A6.10	60 MIN	--	PROVIDE ADA COMPLIANT HARDWARE
04		3' - 0"	7' - 0"	B	ALUM	ALUM	SF	ALUM	SF	PER SF MANUF	PER SF MANUF	--	--	PROVIDE ADA COMPLIANT PUSH & OFFSET DOOR PULL COMBO, CLOSURE, LOCK, THRESHOLD, SWEEP, & SEALS. DOOR SHALL REMAIN OPERABLE ON EGRESS SIDE WHEN LOCKED
05		3' - 0"	6' - 8"	A	SOLID WD	STND	A	HM	PNT	2/A6.10	2/A6.10	--	--	PROVIDE ADA COMPLIANT HARDWARE & LOCK
06		3' - 0"	6' - 8"	A	SOLID WD	STND	A	HM	PNT	2/A6.10	2/A6.10	--	--	PROVIDE ADA COMPLIANT HARDWARE
07		3' - 0"	6' - 8"	A	SOLID WD	STND	A	HM	PNT	2/A6.10	2/A6.10	--	--	PROVIDE ADA COMPLIANT HARDWARE & LOCK
08		3' - 0"	6' - 8"	A	SOLID WD	STND	A	HM	PNT	2/A6.10	2/A6.10	--	--	PROVIDE ADA COMPLIANT HARDWARE & LOCK
09		3' - 0"	7' - 0"	B	ALUM	ALUM	SF	ALUM	SF	PER SF MANUF	PER SF MANUF	--	--	PROVIDE ADA COMPLIANT PUSH & OFFSET DOOR PULL COMBO, CLOSURE, & THRESHOLD

GLASS TYPES

* ENERGY SUMMARY CALCULATED USING GAURDIAN SUNGUARD SN54 (ARGON FILLED), CLEAR

- G1 — 1" INSULATED LOW E GLASS
- G2 — 1" INSULATED LOW E GLASS, TEMPERED
- G3 — 1/4" TEMPERED GLASS
- G4 — 1/4" 1 HOUR WIRELESS FIRE RATED GLASS- GLASS TO BE SAFETY RATED FOR CODE COMPLIANT USE IN DOORS AND ADJACENT SIDELIGHTS/ TRANSOMS

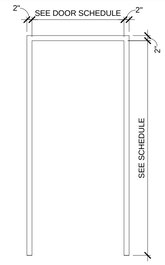

TYPE A

5 FRAME TYPES — scale: 1/2" = 1'-0"

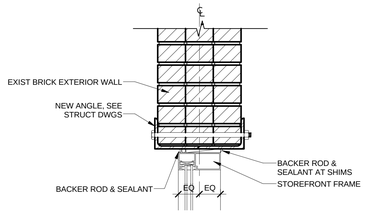

9 SF HEAD @ BRICK — scale: 1 1/2" = 1'-0"

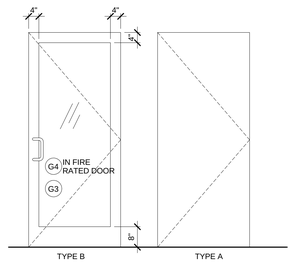

*NOTE: STOREFRONT TO BE DARK BRONZE ANODIZE FINISH

4 DOOR TYPES — scale: 1/2" = 1'-0"

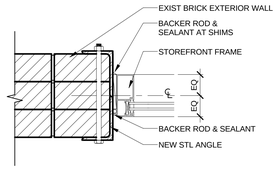

8 SF JAMB @ BRICK — scale: 1 1/2" = 1'-0"

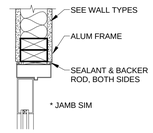

3 INT ALUM HEAD- TYP WALL — scale: 1 1/2" = 1'-0"

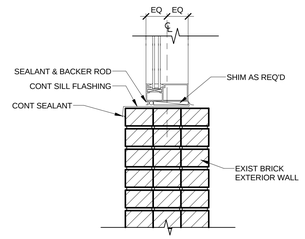

7 SF SILL @ BRICK — scale: 1 1/2" = 1'-0"

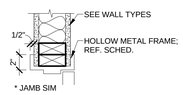

2 INT HM HEAD- TYP WALL — scale: 1 1/2" = 1'-0"

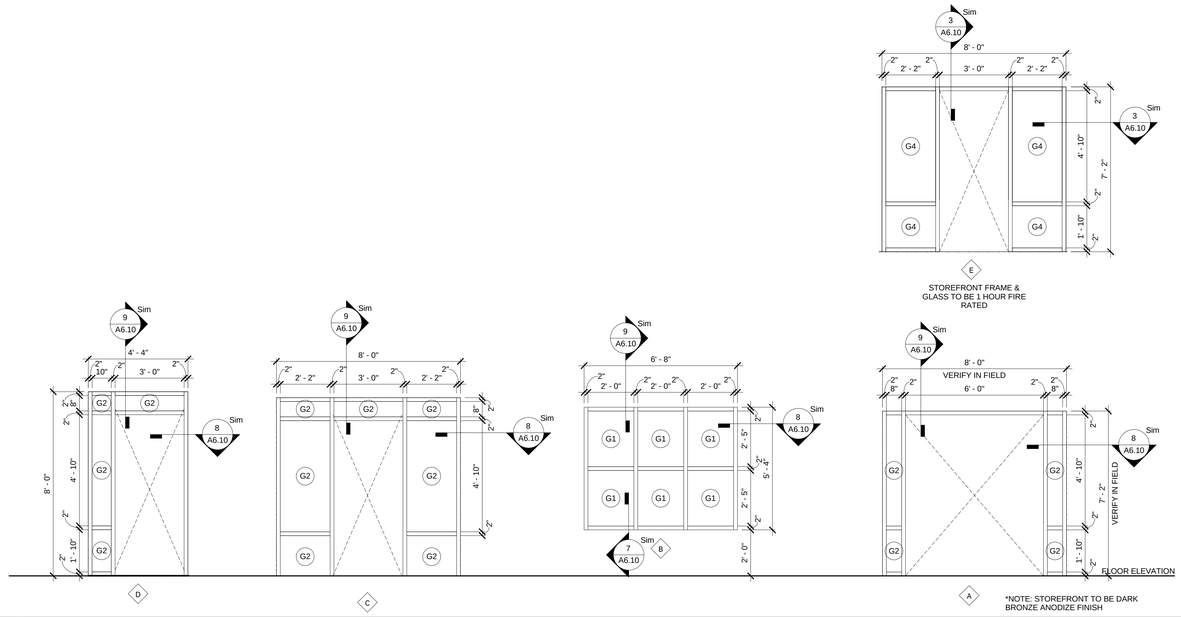

*NOTE: STOREFRONT TO BE DARK BRONZE ANODIZE FINISH

10 STOREFRONT ELEVATIONS — scale: 3/8" = 1'-0"

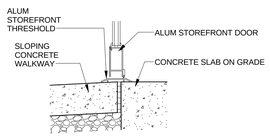

6 EXTERIOR STOREFRONT DOOR SILL — scale: 1 1/2" = 1'-0"

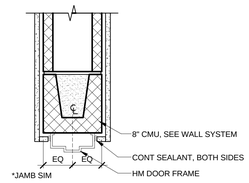

1 DR HEAD @ CMU - INTERIOR — scale: 1 1/2" = 1'-0"

ODa
overcash demmitt
2010 south tryon st. suite 1a
charlotte north carolina 28203
office.704.332.1615
web. www.oda.us.com

STATE OF SOUTH CAROLINA — STEPHEN F. OVERCASH, CHARLOTTE, N. C. — 4-8-16

Kuester COMMERCIAL

Fort Mill Theater Renovation- Phase I

100 Main Street
Fort Mill, SC 29715

FOR CONSTRUCTION
ISSUE DATE: 04/08/16

No.	Description	Date

DOOR SCHEDULES, STOREFRONT ELEV, & DTLS

A6.10

Copyright 2016 Overcash Demitt Architects

ODA No. 152960

4/8/2016 8:36:33 AM

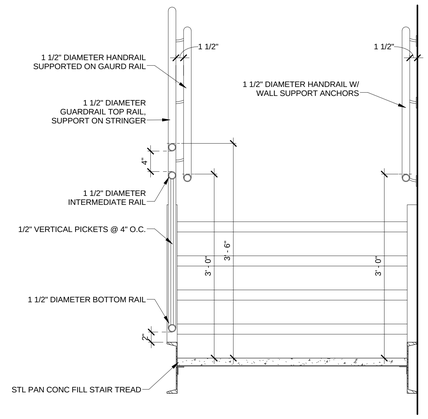

6 STAIR DETAIL D — scale: 1" = 1'-0"

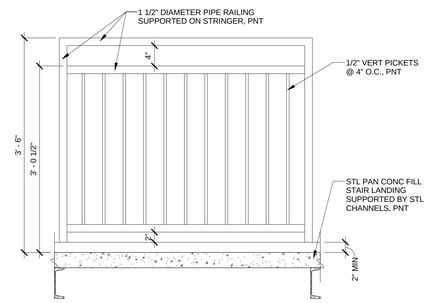

5 STAIR DETAIL C — scale: 1" = 1'-0"

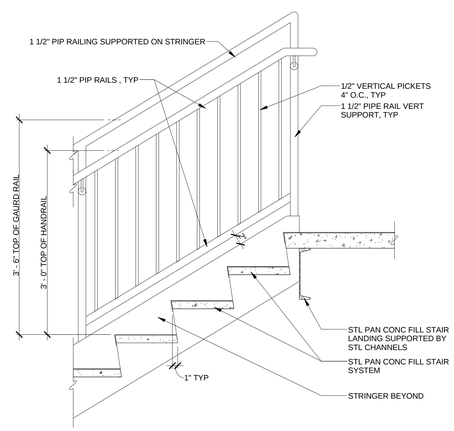

4 STAIR DETAIL B — scale: 1" = 1'-0"

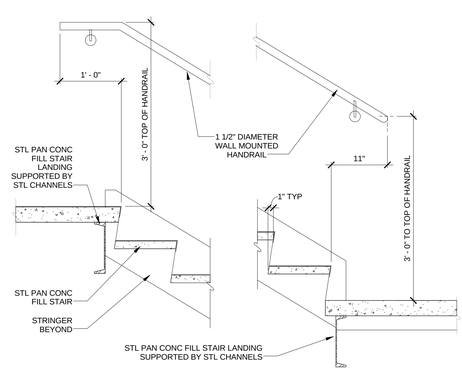

3 STAIR DETAIL A — scale: 1" = 1'-0"

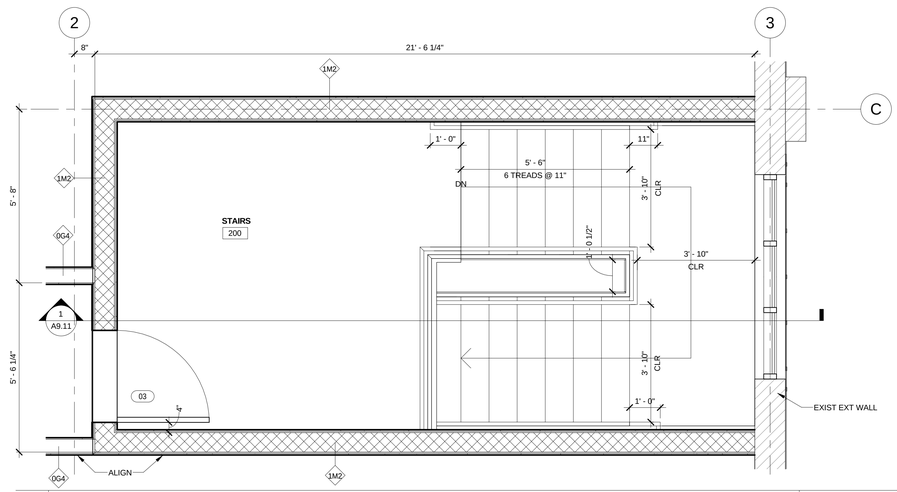

2 ENLARGED STAIR PLAN- LVL 2 — scale: 1/2" = 1'-0"

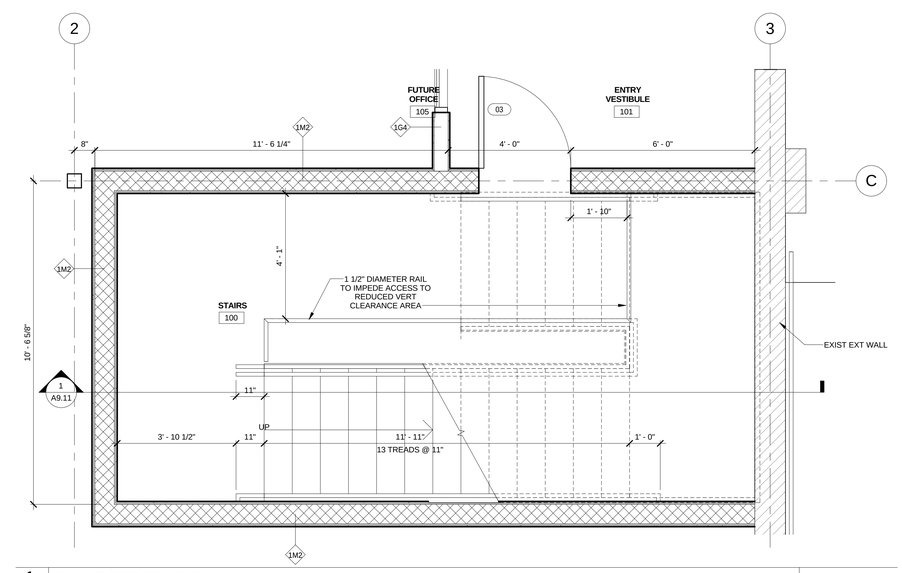

1 ENLARGED STAIR PLAN- LVL 1 — scale: 1/2" = 1'-0"

ODa
overcash demmitt
2010 south tryon st. suite 1a
charlotte north carolina 28203
office.704.332.1615
web. www.oda.us.com

Kuester COMMERCIAL

Fort Mill Theater Renovation- Phase I

100 Main Street
Fort Mill, SC 29715

FOR CONSTRUCTION
ISSUE DATE: 04/08/16

No.	Description	Date

ENLARGED STAIR PLANS & DETAILS

A9.10

Copyright 2016 Overcash Demitt Architects

ODA No. 152960

4/8/2016 8:36:34 AM

overcash demmitt
2010 south tryon st. suite 1a
charlotte north carolina 28203
office.704.332.1615
web. www.oda.us.com

STATE OF SOUTH CAROLINA
STEPHEN F. OVERCASH
CHARLOTTE, N. C.
4-8-16

Kuester COMMERCIAL

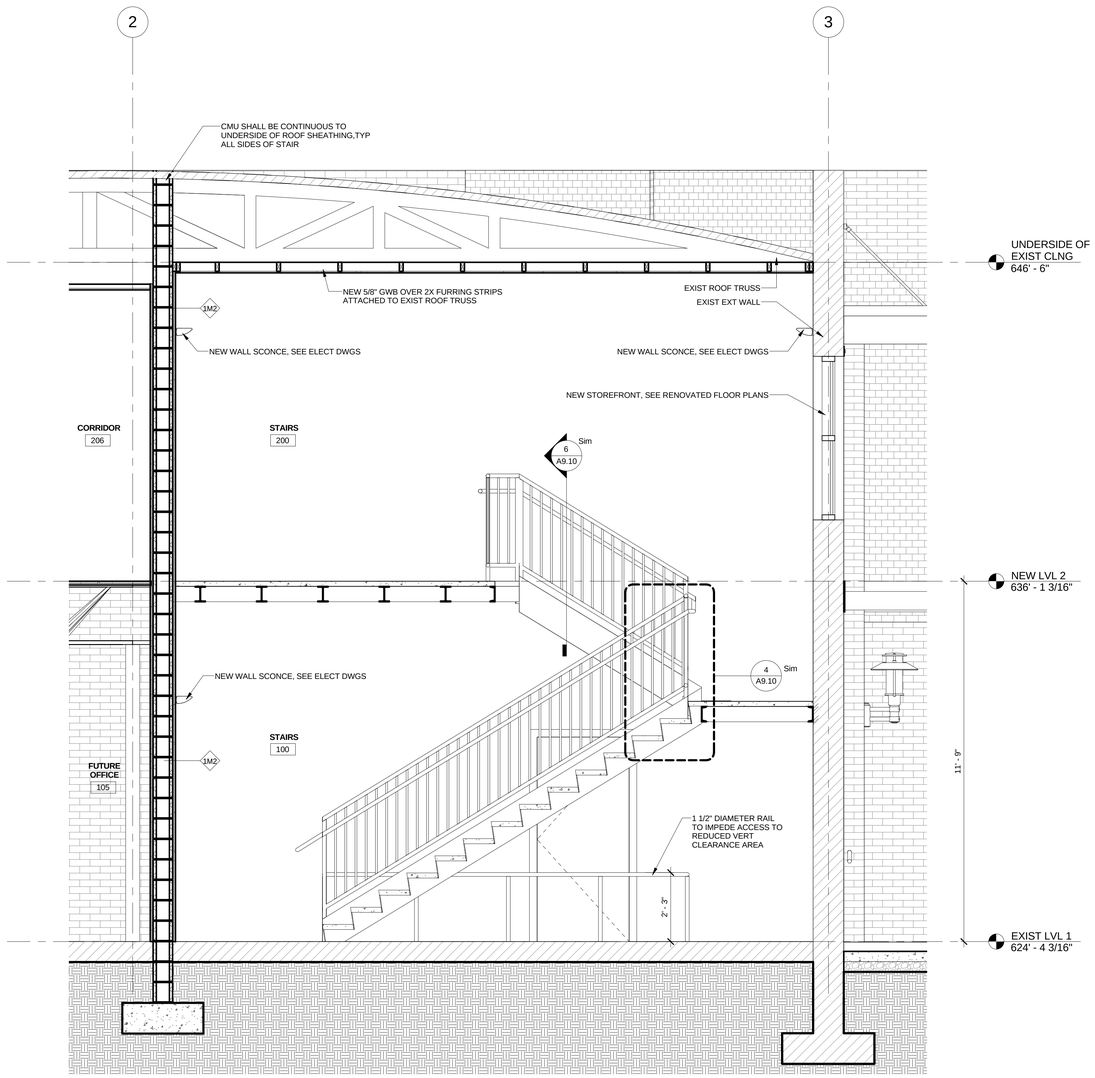

1 STAIR SECTION A

scale: 1/2" = 1'-0"

Fort Mill Theater Renovation-Phase I

100 Main Street
Fort Mill, SC 29715

FOR CONSTRUCTION
ISSUE DATE: 04/08/16

No.	Description	Date

STAIR SECTIONS

A9.11

Copyright 2016 Overcash Demitt Architects
ODA No. 152960

4/8/2016 8:36:36 AM

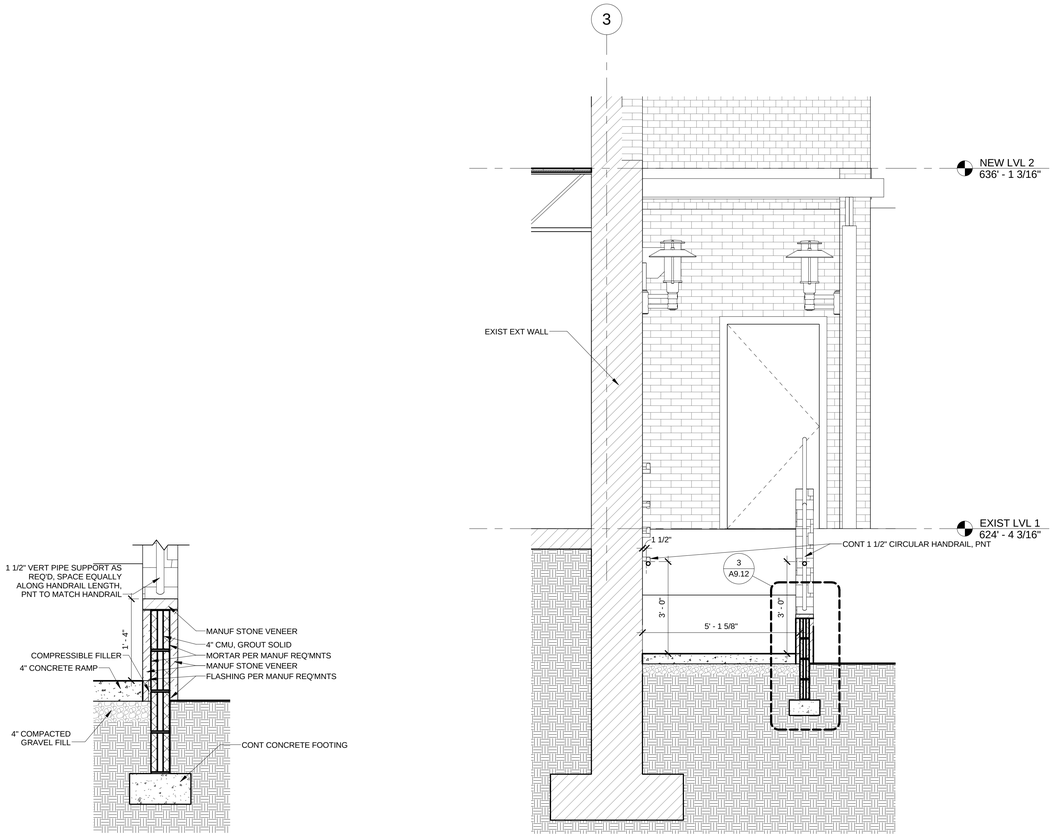

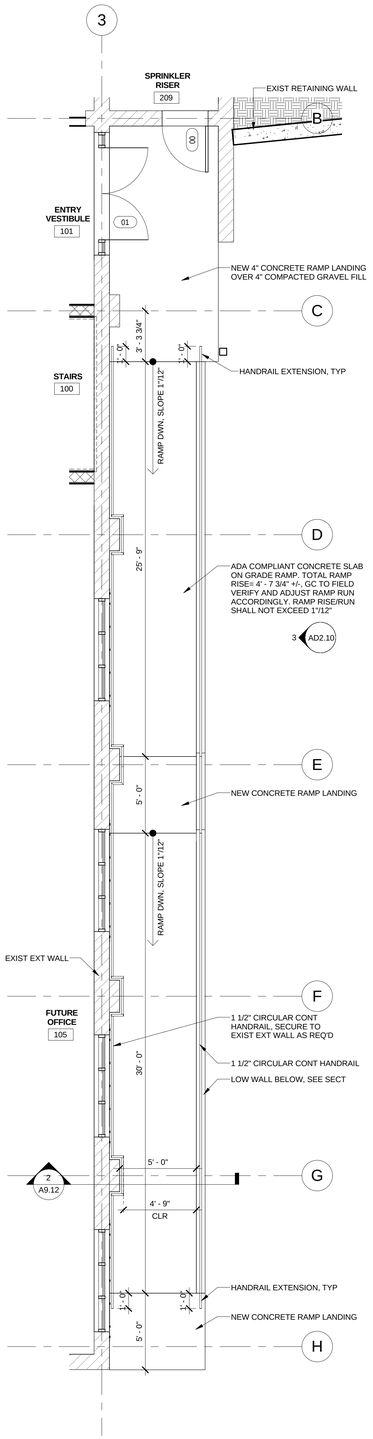

3	ADA RAMP SECT DTL	scale: 1" = 1'-0"	2	ADA RAMP SECTION	scale: 1/2" = 1'-0"	1	ENLARGED ADA RAMP PLAN	scale: 1/4" = 1'-0"

4/8/2016 8:36:37 AM

ODa
overcash demmitt
2010 south tryon st. suite 1a
charlotte north carolina 28203
office.704.332.1615
web. www.oda.us.com

STATE OF SOUTH CAROLINA
STEPHEN F. OVERCASH
CHARLOTTE, N. C.
SEAL
4-8-16

Kuester COMMERCIAL

Fort Mill Theater Renovation-Phase I

100 Main Street
Fort Mill, SC 29715

FOR CONSTRUCTION
ISSUE DATE: 04/08/16

No.	Description	Date

ADA RAMP PLAN, SECTION, & DETAILS

A9.12

Copyright 2016 Overcash Demitt Architects

ODA No. 152960

FLOOR FINISH LEGEND

CARPET TILE

CERAMIC TILE

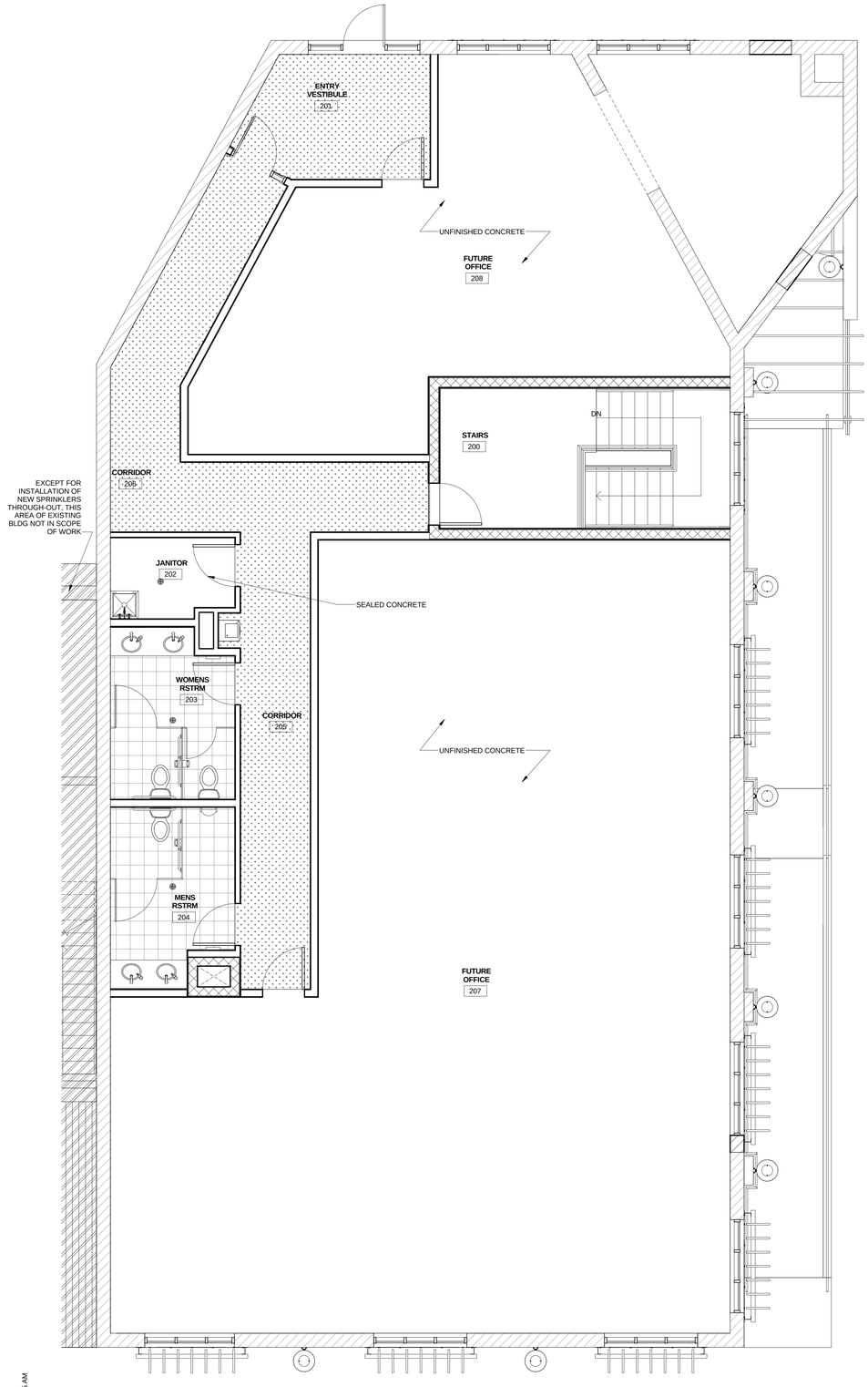

2 NEW LEVEL 2 FINISH PLAN scale: 1/4" = 1'-0"

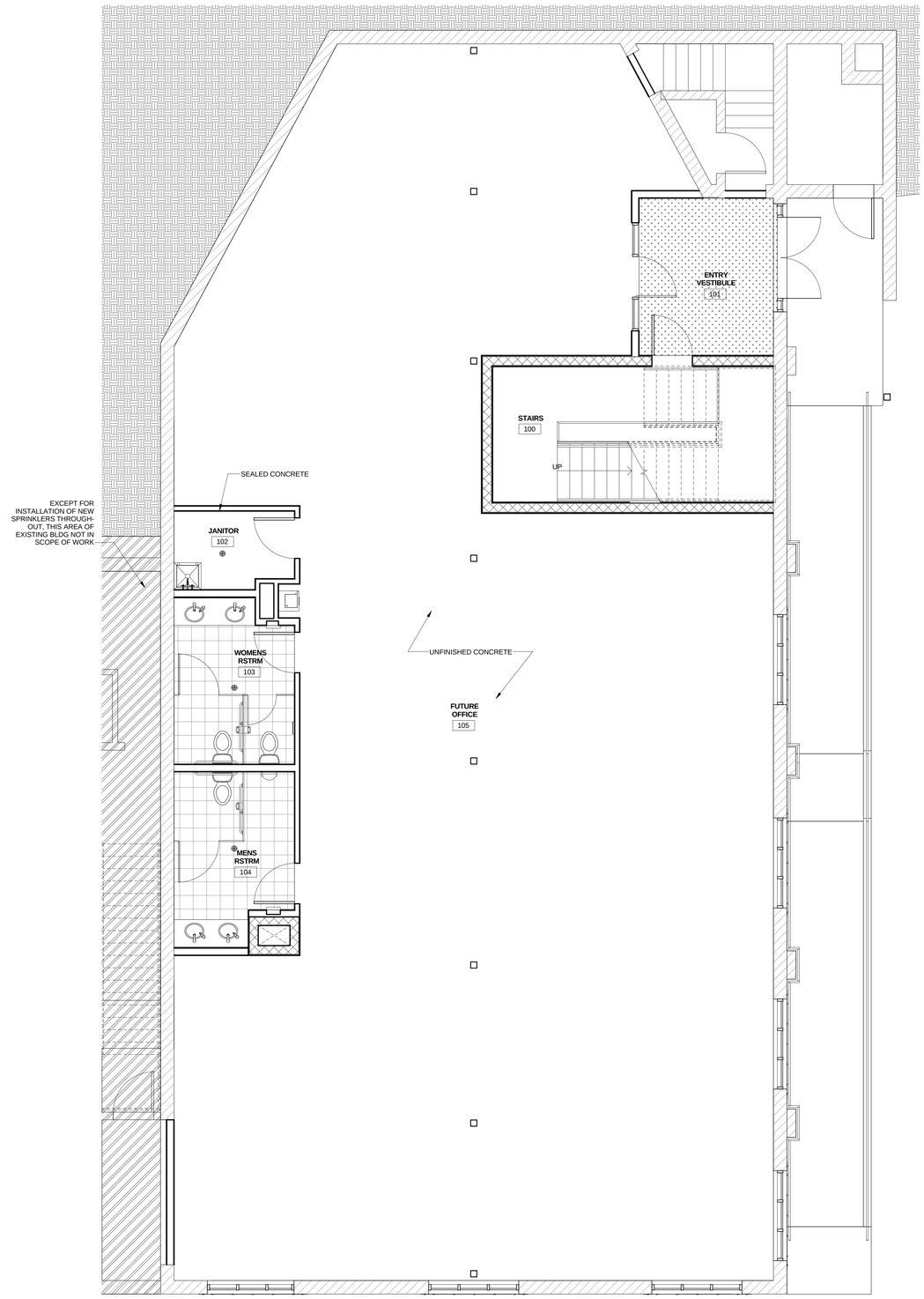

1 LEVEL 1 FINISH PLAN scale: 1/4" = 1'-0"

ODa
overcash demmitt
2010 south tryon st. suite 1a
charlotte north carolina 28203
office.704.332.1615
web. www.oda.us.com

STATE OF SOUTH CAROLINA
STEPHEN F. OVERCASH
CHARLOTTE, N. C.
SEAL
4-8-16

Kuester COMMERCIAL

Fort Mill Theater Renovation-Phase I

100 Main Street
Fort Mill, SC 29715

FOR CONSTRUCTION
ISSUE DATE: 04/08/16

No.	Description	Date

FLOOR FINISH PLANS

A10.10

Copyright 2016 Overcash Demitt Architects

ODA No. 152960

4/11/2016 9:21:55 AM

DESIGN CRITERIA:

1. STRUCTURAL DESIGN CONFORMS TO THE REQUIREMENTS OF THE INTERNATIONAL BUILDING CODE (IBC), 2012 EDITION.
2. ROOF LIVE LOADS USED IN DESIGN
   MINIMUM .... 20 PSF
3. THE ROOF WAS CHECKED FOR PONDED WATER IN ACCORDANCE WITH SECTION 1608.3.5 OF THE IBC.
4. SNOW LOAD PER SECTION 1608 OF THE IBC.
   50 YEAR RECCURANCE GROUND SNOW LOAD, Pg .... 10 PSF
5. FLOOR LIVE LOADS (POUNDS PER SQUARE FOOT):
   CORRIDORS ABOVE FIRST FLOOR .... 80 PSF
   LOBBIES AND FIRST FLOOR CORRIDORS .... 100 PSF
   OFFICE ....50 PSF.. 50 PSF
6. WIND LOAD DATA:
   WIND LOAD DESIGN IS BASED ON ASCE 7–10, CHAPTER 6, WHICH IS THE VERSION OF ASCE 7 CURRENTLY REFERENCED IN THE IBC SECTION 1609.
   EXPOSURE CATEGORY .... B
   BASIC WIND SPEED .... 90 MPH
   WIND IMPORTANCE FACTOR, I 1.0
   POSITIVE INTERNAL PRESSURE COEFF., GCPi .... +0.18
   NEGATIVE INTERNAL PRESSURE COEFF., GCPi .... –0.18
   WIND BASE SHEAR, Vx .... N/A
   WIND BASE SHEAR, Vy .... N/A
   VELOCITY PRESSURE FOR COMPONENTS AND CLADDING, q ..... 20 PSF
7. SEISMIC LOAD DATA:
   SEISMIC LOAD DESIGN IS BASED ON SECTION 1613 OF THE IBC.
   SEISMIC USE GROUP .... GROUP II
   DESIGN SPECTRAL RESPONSE COFF., Sds 0.36
   DESIGN SPECTRAL RESPONSE COFF., Sd1 .... 0.21
   SITE CLASS .... D
   BASIC SEISMIC FORCE RESISTING SYSTEM .... D
   DESIGN BASE SHEAR, V .... 2.4 KIPS
   ANALYSIS PROCEDURE, EQUIVALENT LATERAL FORCE
   SECTION 1614.1.1 – ADDITIONS TO EXISTING BUILDINGS IS SATISFIED.

COORDINATION:

1. STRUCTURAL DRAWINGS SHALL BE USED IN CONJUNCTION WITH, AND COORDINATED WITH, ARCHITECTURAL AND OTHER CONTRACT DOCUMENTS.
2. THE DRAWINGS ARE INTENDED TO SHOW THE GENERAL ARRANGEMENT, DESIGN AND EXTENT OF THE WORK. THEY ARE NOT INTENDED TO BE SCALED FOR MEASUREMENTS, OR TO SERVE AS SHOP DRAWINGS.
3. ALL DETAILS AND SECTIONS SHOWN ON THE DRAWINGS ARE INTENDED TO BE TYPICAL AND SHALL BE CONSTRUED TO APPLY TO ANY SIMILAR CONDITION, EXCEPT WHERE A DIFFERENT DETAIL OR SECTION IS SHOWN.
4. THE CONTRACTOR AND ALL SUBCONTRCTORS SHALL VERIFY ALL GRADES, LINES, LEVELS, CONDITIONS AND DIMENSIONS IN THE FIELD AND AS SHOWN ON THE DRAWINGS. THEY SHALL REPORT ANY ERRORS OR INCONSISTENCIES IN THE ABOVE TO THE PROJECT ARCHITECT/ ENGINEER BEFORE COMMENCING WORK. THE CONTRACTOR AND SUBCONTRACTORS SHALL LAY OUT THEIR WORK FROM ESTABLISHED REFERENCE POINTS AND BE REASPONSIBLE FOR ALL LINES, ELEVATIONS AND MEASUREMENTS IN CONNECTION WITH THEIR WORK.
5. IF ANY ERRORS OR OMISSIONS APPEAR IN THE DRAWINGS, SPECIFICATIONS OR OTHER DOCUMENTS THE CONTRACTOR SHALL NOTIFY THE PROJECT ARCHITECT/ ENGINEER IN WRITING OF SUCH ERRORS AND OMISSIONS PRIOR TO PROCEEDING WITH ANY WORK. IN THE EVENT OF THE CONTRACTOR'S FAILING TO GIVE SUCH NOTICE, THE CONTRACTOR SHALL BE RESPONSIBLE FOR THE RESULTS AND THE COSTS OF RETIFYING ANY SUCH ERRORS OR OMISSIONS.
6. CONTRACTOR SHALL BE RESPONSIBLE FOR FIELD MEASURING ALL DIMENSIONS.
7. SUBMIT ONE SEPIA AND ONE PRINT OF SHOP DRAWINGS FOR A/E REVIEW PRIOR TO FABRICATION.
8. SHOP DRAWINGS SHALL BE REVIEWED, NOTED AND STAMPED BY THE CONTRACTOR PRIOR TO SUBMITTING TO A/E FOR REVIEW.
9. PROJECT ENGINEER ASSUMES NO RESPONSIBILTIY FOR DIMENSIONS, QUANTITIES, ERRORS OR OMISSIONS AS A RESULT OF REVIEWING ANY SHOP DRAWINGS.
10. THE REVIEW OF ALL STRUCTURAL SUBMITTALS BY THE PROJECT STRUCTURAL ENGINEER OF RECORD SHALL BE TO INSURE THE INTENT OF THE CONTRACT DOCUMENTS HAS BEEN UNDERSTOOD AND THAT THE SPECIFIED CRITERIA HAVE BEEN USED.

FOUNDATIONS:

1. ASSUMED FOUNDATION BEARING PRESSURES USED IN DESIGN:
   COLUMN FOOTINGS .... 3000 PSF
   WALL FOOTINGS .... 3000 PSF
2. BEARING PRESSURES SHALL BE VERIFIED BY A QUALIFIED GEOTECHNICAL TECHNICIAN, PRIOR TO PLACEMENT OF FOUNDATIONS.

REINFORCING STEEL:

1. REINFORCING STEEL STEEL SHALL BE NEW BILLET STEEL CONFORMING TO ASTM A 615–92a, GRADE 60 SPECIFICATIONS.
2. WELDED WIRE FABRIC SHALL BE NEW BILLET STEEL, COLD DRAWN CONFORMING TO ASTM A 185–90a AND ASTM A 82–88 SPECIFICATIONS.
3. DESIGN, DETAILING, FABRICATION, BAR SUPPORTS AND PLACING OF REINFORCING STEEL SHALL BE IN ACCORDANCE WITH THE ACI CODE AND DETAILING MANUAL.

CAST IN PLACE CONCRETE:

1. CAST IN PLACE CONCRETE SHALL BE PROPORTIONED TO MEET THE REQUIREMENTS OF THE FOLLOWING TABLE:

ELEMENT	28–DAY STRENGTH (PSI)	TOTAL AIR (%)	SLUMP RANGE (IN.)	W/C RATIO	UNIT WEIGHT (PCF)
COLUMN FOOTINGS	3000	2.5–6	1–3	0.53	150
WALL FOOTINGS	3000	2.5–6	1–3	0.53	150
SLAB–ON–GRADE	3500	2.5–6	1–3	0.53	150
RETAINING WALL	4000	2.5–6	1–3	0.48	150

2. CONCRETE DESIGN AND REINFORCING SHALL BE IN ACCORDANCE WITH WITH "BUILDING CODE REQUIREMENTS FOR STRUCTURAL CONCRETE"(ACI 318–95) AND WITH "DETAILS AND DETAILING OF CONCRETE REINFORCEMENT" (ACI 315–92).
3. ALL CONCRETE CONSTRUCTION SHALL BE IN ACCORDANCE WITH "SPECIFICATIONS FOR STRUCTURAL CONCRETE FOR BUILDING" (ACI 309–89). PRODUCTION, DELIVERY, PLACING AND CURING OF CONCRETE SHALL BE IN ACCORDANCE WITH "HOT WEATHERING CONCRETE"(ACI 305R–91) OR "COLD WEATHERING CONCRETE"(ACI 306R–88) WHEN APPLICABLE.
4. ADMIXTURES SHALL NOT BE PERMITTED IN THE CONCRETE WITHOUT PRIOR REVIEW BY THE PROJECT STRUCTURAL ENGINEER.
5. CONTRACTOR IS RESPONSIBLE FOR THE ADEQUACY OF FORMS AND SHORING AND FOR THE SAFE PRACTICE IN THEIR USE AND REMOVAL. CONTRACTOR SHALL DESIGN AND ERRECT FORMWORK IN ACCORDANCE WITH WITH ACI 347. FORMWORK SHALL REMAIN IN PLACE UNITL CONCRETE HAS ADEQUATE STRENGTH TO SUPPORT ALL DEAD LOAD PLUS A MINIMUM OF 50 PSF CONSTRUCTION LOAD.
6. CONDUITS IN CONCRETE SLABS SHALL BE SPACED AT A MINIMUM OF THREE TIMES THE OUTSIDE DIAMETER OF THE LARGEST CONDUIT. CONDUITS THAT CROSS EACH OTHER IN THE SLAB SHALL NOT CONSUME MORE THAN ONE THIRD OF THE SLAB THICKNESS AT THE POINT OF INTERSECTION.
7. SPECIFIED EXPANSION BOLTS SHALL BE OF THE SIZE INDICATED AND AT THE MAXIMUM EMBEDMENT DEPTH INTO THE CONCRETE. EXPANSION BOLTS AND ACCESSORIES SHALL BE STAINLESS STEEL (AISI 304, MINIMUM) DEEP WEDGE TYPE. LEAD SHIELDS ARE NOT ACCEPTABLE. EXPANSION BOLTS SHALL NOT BE SUBSTITUED FOR SPECIFIED ANCHOR BOLTS WITHOUT THE PROJECT STRUCTURAL

SLAB ON GRADE:

1. ALL CONCRETE SLABS ON GRADE SHALL BE IN ACCORDANCE WITH THE LATEST ACI "GUIDE FOR CONCRETE FLOOR AND SLAB CONSTRUCTION".
2. CONCRETE IN SLAB ON GRADE SHALL BE POURED IN STRIPS BY DELAYING THE POURING OF ALTERNATE STRIPS UNTIL THE ORIGINAL POUR HAS HARDENED. STRIP SECTION SHAAL HAVE A MAXIMUM AREA OF 1600 SQUARE FEET AND A MAXIMUM LENGTH OF 40 FEET. SUBMIT SHOP DRAWINGS INDICATING CONSTRUCTION JOINTS FOR A/E APPROVAL.
3. JOINTS SHALL BE PROVIDED IN ALL SLABS ON GRADE WHERE INDICATED ON PLANS. PROVIDE SAWCUT JOINTS AT A MAXIMUM SPACING OF 20 FEET ON CENTER FOR ISOLATION JOINTS AND AT 5 FEET ON CENTER FOR SIDEWALKS. SUBMIT SHOP DRAWINGS INDICATING CONTROL JOINTS FOR A/E APPROVAL.

MASONRY:

1. ALL MASONRY DESIGN SHALL BE IN ACCORDANCE WITH "BUILDING CODE REQUIREMENTS FOR MASONRY STRUCTURES" (ACI 530/ASCE 5/TMS 402)
2. ALL MASONRY CONSTRUCTION SHALL BE IN ACCORDANCE WITH "SPECIFICATIONS FOR MASONRY STRUCTURES" (ACI 530.1/ASCE 6/TMS 602).
3. CONCRETE MASONRY UNITS SHALL CONFORM TO THE REQUIREMENTS OF ASTM C–90, TYPE II, GRADE N–II. CONCRETE MASONRY UNITS SHALL BE LIGHTWEIGHT (U.N.O.) WITH A UNIT WEIGHT OF 30 PSF FOR A 6"UNIT, 38 PSF FOR A 8"UNIT AND 55 PSF FOR A 12"UNIT.
4. MASONRY COMPRESSIVE STRENGTH OF MASONRY ASSEMBLAGE, f'm, SHALL BE 1500 PSI, MINIMUM.
5. MORTAR FOR UNIT MASONRY SHALL CONFORM TO THE REQUIREMENTS OF ASTM C 270, SHALL BE TYPE M AND SHALL HAVE A MINIMUM 28 DAY COMPRESSIVE STRENGTH OF 2,500 PSI.
6. GROUT FOR HOLLOW MASONRY UNITS SHALL CONFORM TO THE REQUIREMENTS OF ASTM C 476 – FINE AND SHALL HAVE A MINIMUM 28 DAY COMPRESSIVE STRENGTH OF 3,000 PSI.

WOOD TRUSS DESIGN DATA:

1. TRUSS LUMBER SHALL BE MIXED SOUTHERN PINE, NO. 1 GRADE (15% MOISTURE CONTENT) WITH MAXIMUM ALLOWABLE STRESSES AS LISTED BELOW:
   A. EXTREME FIBER IN BENDING 1300 PSI
   B. TENSION PARALLEL TO GRAIN 750 PSI
   C. HORIZONTAL SHEAR 90 PSI
   D. COMP. PERPENDICULAR TO GRAIN 565 PSI
   E. COMP. PARALLEL TO GRAIN 1600 PSI
   F. MODULUS OF ELASTICITY 1,700,000 PSI
2. ALL TRUSS JOINT CONNECTIONS SHALL BE MADE USING FLEXIBLE CONNECTIONS OF SHEAR PLATES, AND IN ACCORDANCE WITH THE TRUSS PLATE INSTITUTE.
3. ALL WOOD TRUSSES SHALL BE DESIGNED IN ACCORDANCE WITH THE NORTH CAROLINA STATE BUILDING CODE FOR THE LOADS AS NOTED.

	FLOOR
DEAD LOAD	20 PSF
LIVE LOAD	80 PSF

4. DEAD LOAD INDICATED ABOVE IS IN ADDITION TO WEIGHT OF TRUSSES.
5. SUBMIT SHOP DRAWINGS FOR REVIEW PRIOR TO TRUSS FABRICATION. SHOP DRAWINGS SHALL INDICATE ALL BRACING REQUIRED FOR ERECTION AND SHALL SHOW PERMANENT BRACING.
6. TRUSS MANUFACTURER SHALL DESIGN AND PROVIDE ALL CONNECTIONS AND ACCESSORIES REQUIRED FOR COMPLETE ASSEMBLY AND ERECTION OF ROOF TRUSS SYSTEM, INCLUDING ALL COMPONENTS.

STRUCTURAL LUMBER: DECKING

1. FLOOR DECKING SHALL BE 3/4" STRUCTURAL II C–C EXT. APA PLYWOOD.
2. PANELS SHALL BE LAID W/GRAIN PERPENDICULAR TO TRUSSES AND CONTINUOUS PANEL JOINTS PERPENDICULAR TO JOISTS. PANELS SHALL BEAR ON JOIST TOP CHORD AND BUTT ALONG THEIR CENTER LINES.

STRUCTURAL LUMBER: WALL SHEATHING

1. SHEATHING SHALL BE EXTERIOR RATED 7/16" OREINTED STRAND BOARD (OSB).

STRUCTURAL LUMBER: BEAMS AND HEADERS

1. FRAMING LUMBER SHALL BE MIXED SOUTHERN PINE, NO. 2 GRADE (15% MOISTURE CONTENT) WITH MAXIMUM ALLOWABLE STRESSES AS LISTED BELOW:
   A. EXTREME FIBER IN BENDING 1,100 PSI
   B. TENSION PARALLEL TO GRAIN 625 PSI
   C. HORIZONTAL SHEAR 90 PSI
   D. COMP. PERPENDICULAR TO GRAIN 656 PSI
   E. COMP. PARALLEL TO GRAIN 1,800 PSI
   F. MODULUS OF ELASTICITY 1,500,000 PSI
2. FRAMING LUMBER SHALL BE CONNECTED PER THE FASTENING SCHEDULE. WHERE SPECIFIED, PROVIDE SIMPSON CONNECTORS OR APPROVED EQUIVALENT.

STRUCTURAL LUMBER: STUDS, CEILING JOISTS AND RAFTERS

1. FRAMING LUMBER SHALL BE SPRUCE PINE–FIR, NO. 2 GRADE (15% MOISTURE CONTENT) WITH MAXIMUM ALLOWABLE STRESSES AS LISTED BELOW:
   A. EXTREME FIBER IN BENDING 850 PSI
   B. TENSION PARALLEL TO GRAIN 400 PSI
   C. HORIZONTAL SHEAR 70 PSI
   D. COMP. PERPENDICULAR TO GRAIN 335 PSI
   E. COMP. PARALLEL TO GRAIN 1050 PSI
   F. MODULUS OF ELASTICITY 1,200,000 PSI
2. FRAMING LUMBER SHALL BE CONNECTED PER THE FASTENING SCHEDULE. WHERE SPECIFIED, PROVIDE SIMPSON CONNECTORS OR APPROVED EQUIVALENT.

MICROLLAM TIMBER (LVL):

1. DESIGN, DETAILING AND FABRICATION OF GLULAM SHALL CONFORM TO THE REQUIREMENTS OF NATIONAL EVALUATION SERVICE, INC. (NES) REPORT NO. NER–481.
2. MICROLLAM MEMBERS SHALL BE 1.9E MICROLLAM AS MANUFACTURED BY TRUS JOIST MACMILLAN, OR APPROVED EQUIVALENT WITH ALLOWABLE STRESS AS LISTED BELOW:
   A. Fb, EXTREME FIBER IN BENDING 2600 PSI
   B. Fv, HORIZONTAL SHEAR 285 PSI
   C. Fc, COMP. PERPENDICULAR TO GRAIN 750 PSI
   D. Fc, COMP. PARALLEL TO GRAIN 2310 PSI
   E. E, MODULUS OF ELASTICITY 1,900,000 PSI
3. PROVIDE SIMPSON CONNECTORS AS SPECIFIED OR APPROVED EQUIVALENT.

SHEET LIST:

S1.01 – GENERAL NOTES AND TYPICAL DETAILS
S2.01 – FOUNDATION PLAN
S2.02 – SECOND FLOOR FRAMING PLAN

16 G E N E R A L N O T E S

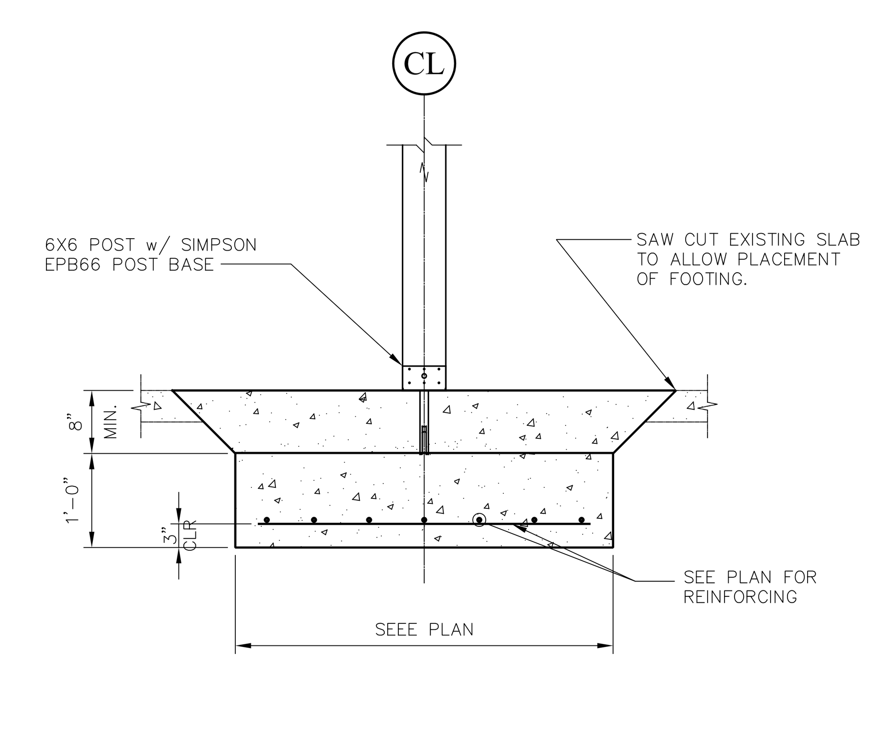

3 COLUMN / FOOTING SECTION

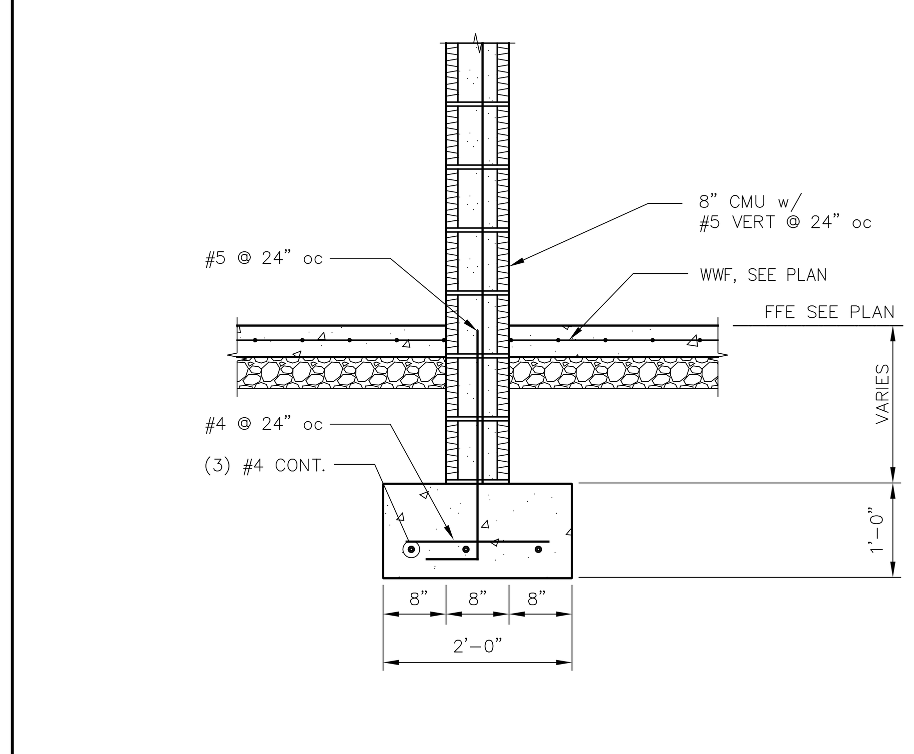

4 SHAFT WALL SECTION

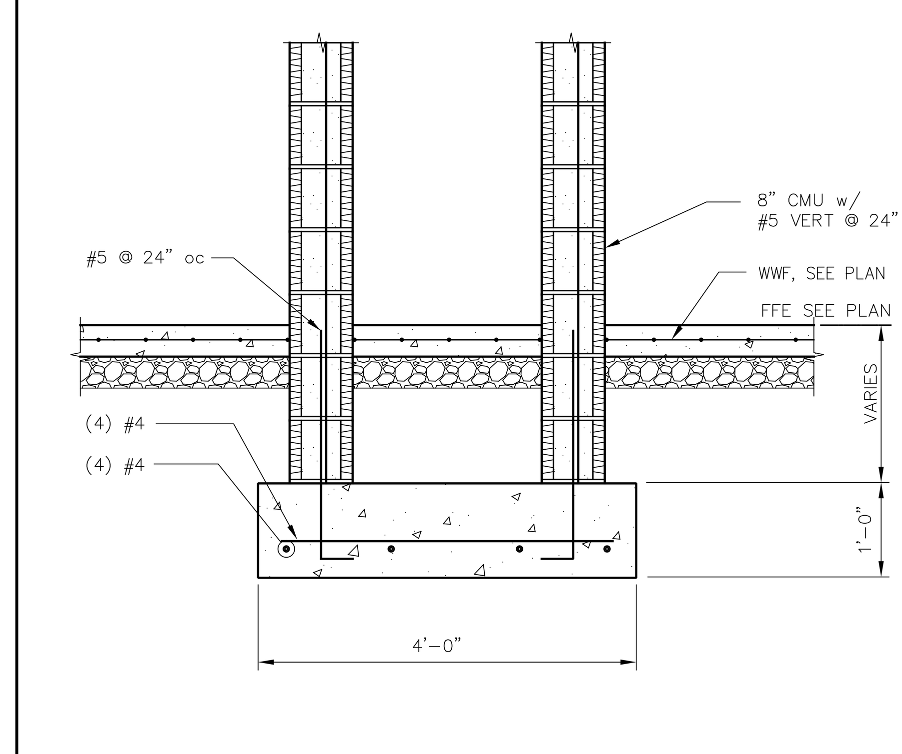

5 SHAFT WALL SECTION

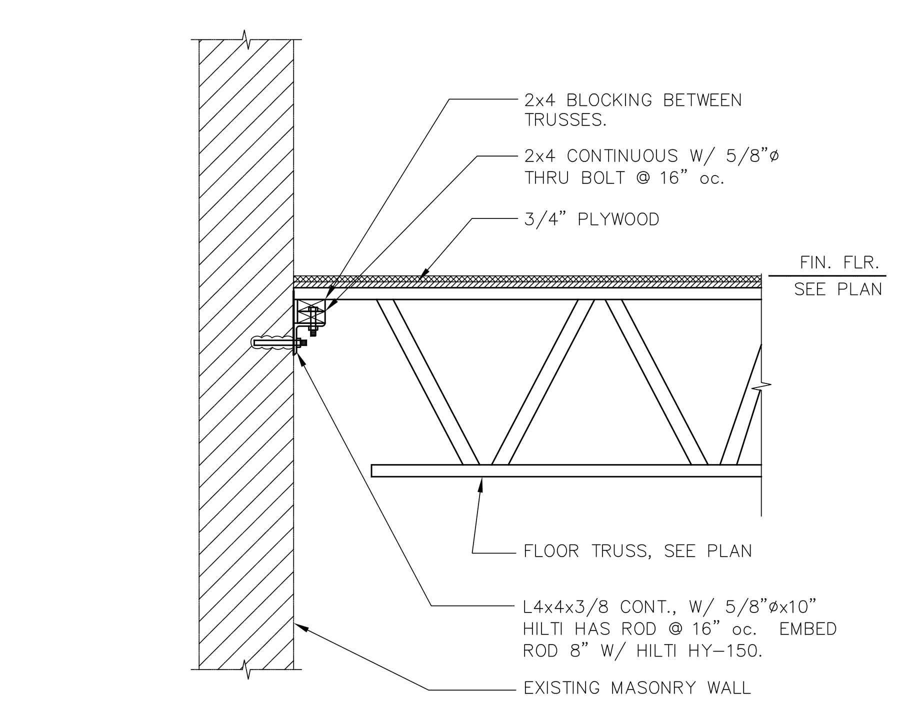

8 SECTION

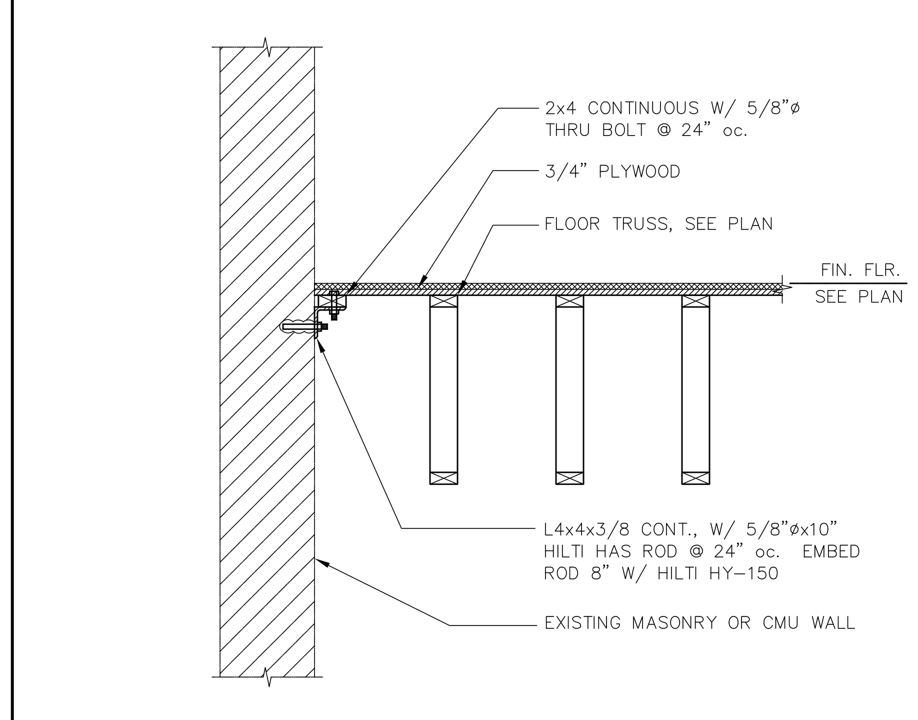

9 SECTION

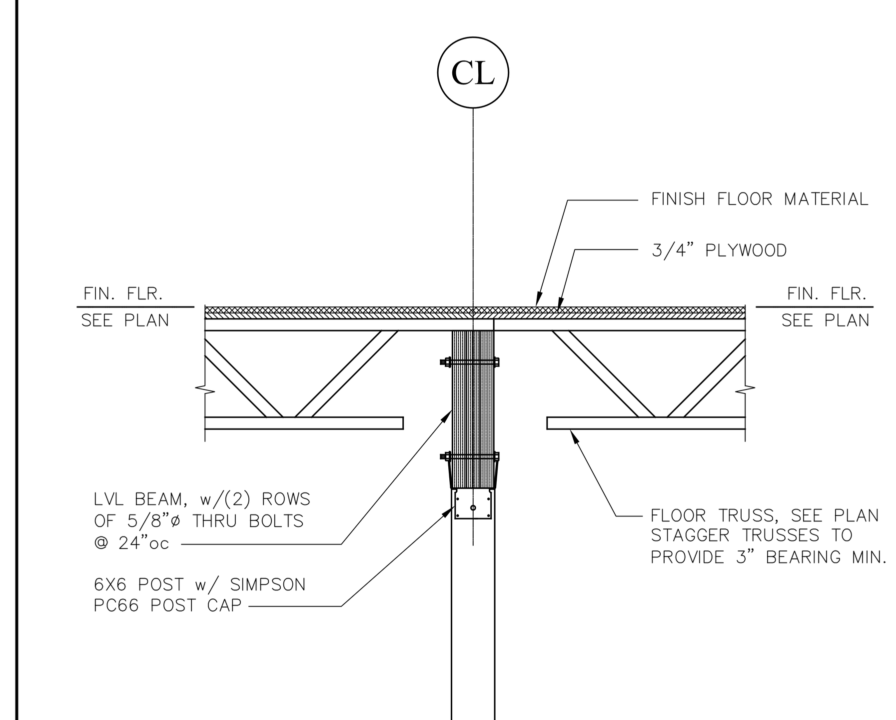

10 SECTION

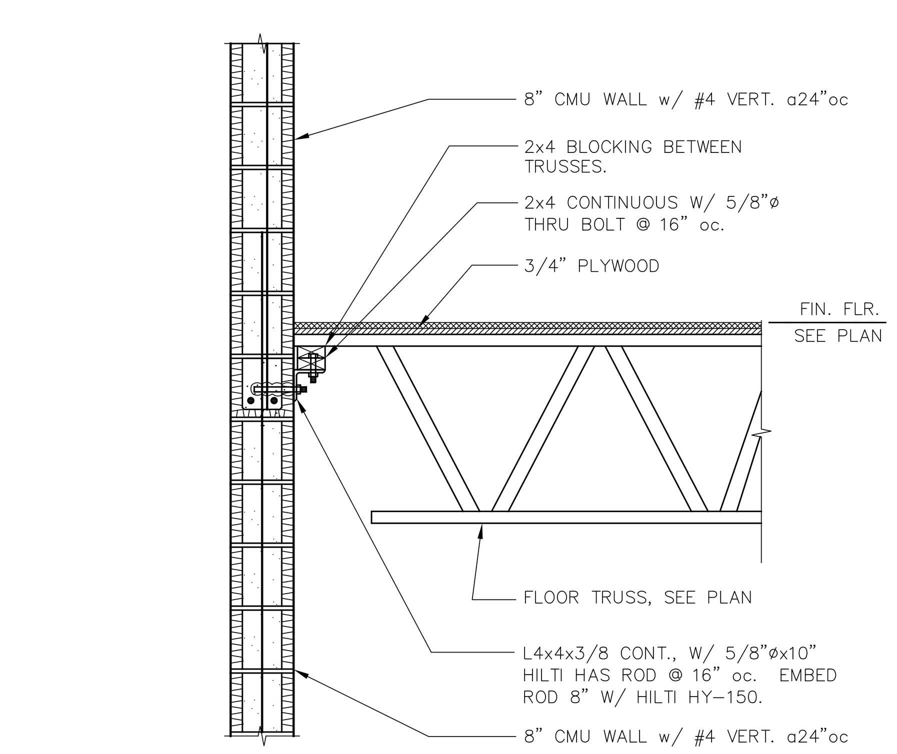

13 SECTION

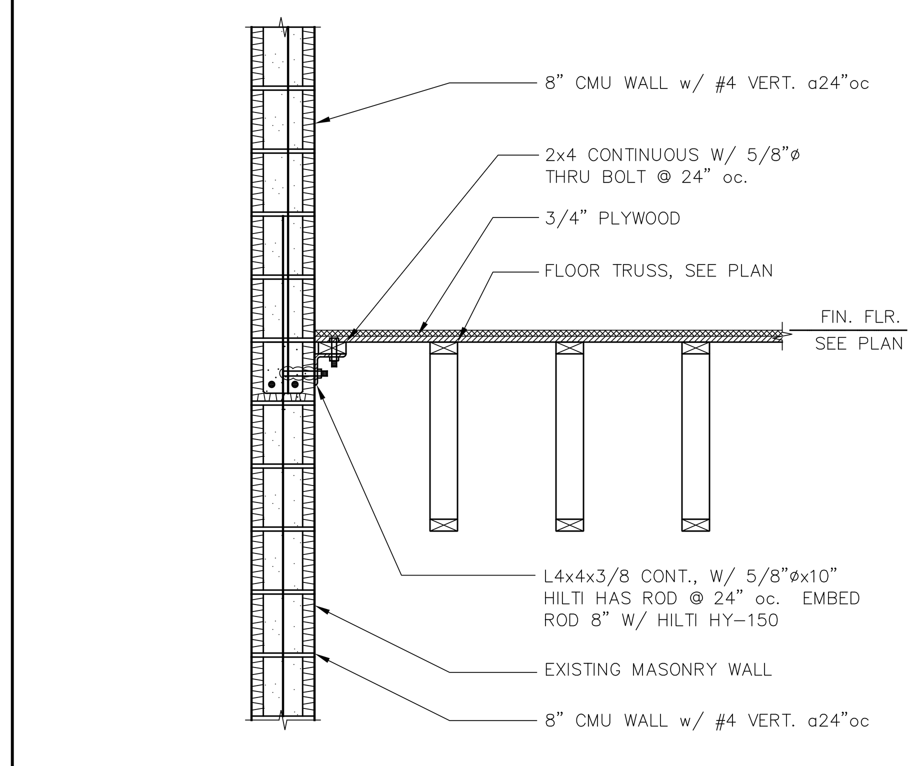

14 SECTION

NOT USED

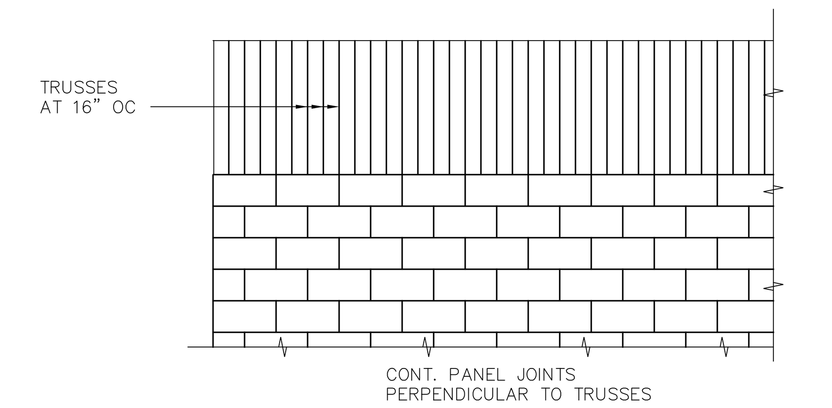

1. PLYWOOD DECKING SHALL BE 3/4" STRUCTURAL II C–C INT. APA.
2. PANELS SHALL BE LAID W/GRAIN PERPENDICULAR TO TRUSSES AND CONTINUOUS PANEL JOINTS PERPENDICULAR TO TRUSSES. PANELS SHALL BEAR ON TRUSS TOP CHORD AND BUTT ALONG THEIR CENTER LINES.
3. PANELS SHALL BE NAILED TO TRUSS TOP CHORDS W/10d NAILS PLACED NOT LESS THAN 3/8" FROM PANEL EDGES. MAXIMUM NAIL SPACING SHALL BE 12" ALONG INTERMEDIATE SUPPORTS AND 6" ALONG PANEL EDGE BEARING.

NO SCALE

18 PANEL PATTERN FOR PLYWOOD DECKING

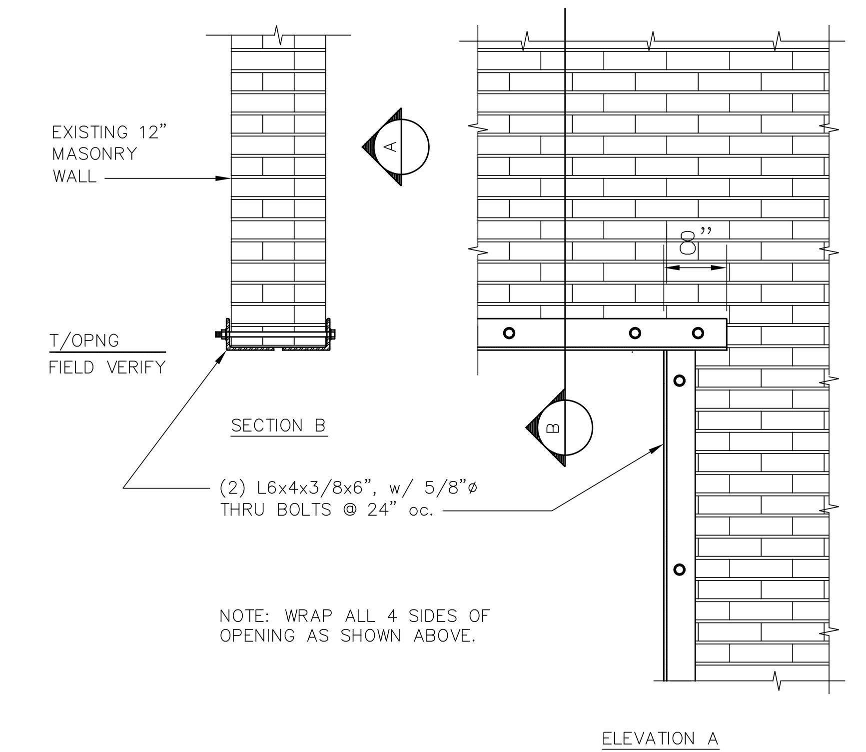

NO SCALE

19 MASONRY LINTEL DETAIL

NOT USED

overcash demmitt
2010 south tryon st. suite 1a
charlotte north carolina 28203
office.704.332.1615
web. www.oda.us.com

John L. Plummer Jr., P.E.
Structural Engineer
112 Old Statesville Road, South
Suite 108
Huntersville, North Carolina 28078
phone: 704.948.0766 e-mail: john@jlpjrpe.com

C:\Users\briant\Desktop\00-E Transmit Files\152960-FtMillTheater-KuesterLogo-1402901.jpg

Fort Mill Theater Renovation-Phase I

100 Main Street
Fort Mill, SC 29715

FOR CONSTRUCTION
ISSUE DATE: 04/08/16

No.	Description	Date

GENERAL NOTES AND TYPICAL SECTIONS AND DETAILS

S1.01

Copyright 2016 Overcash Demitt Architects
ODA No. 152960

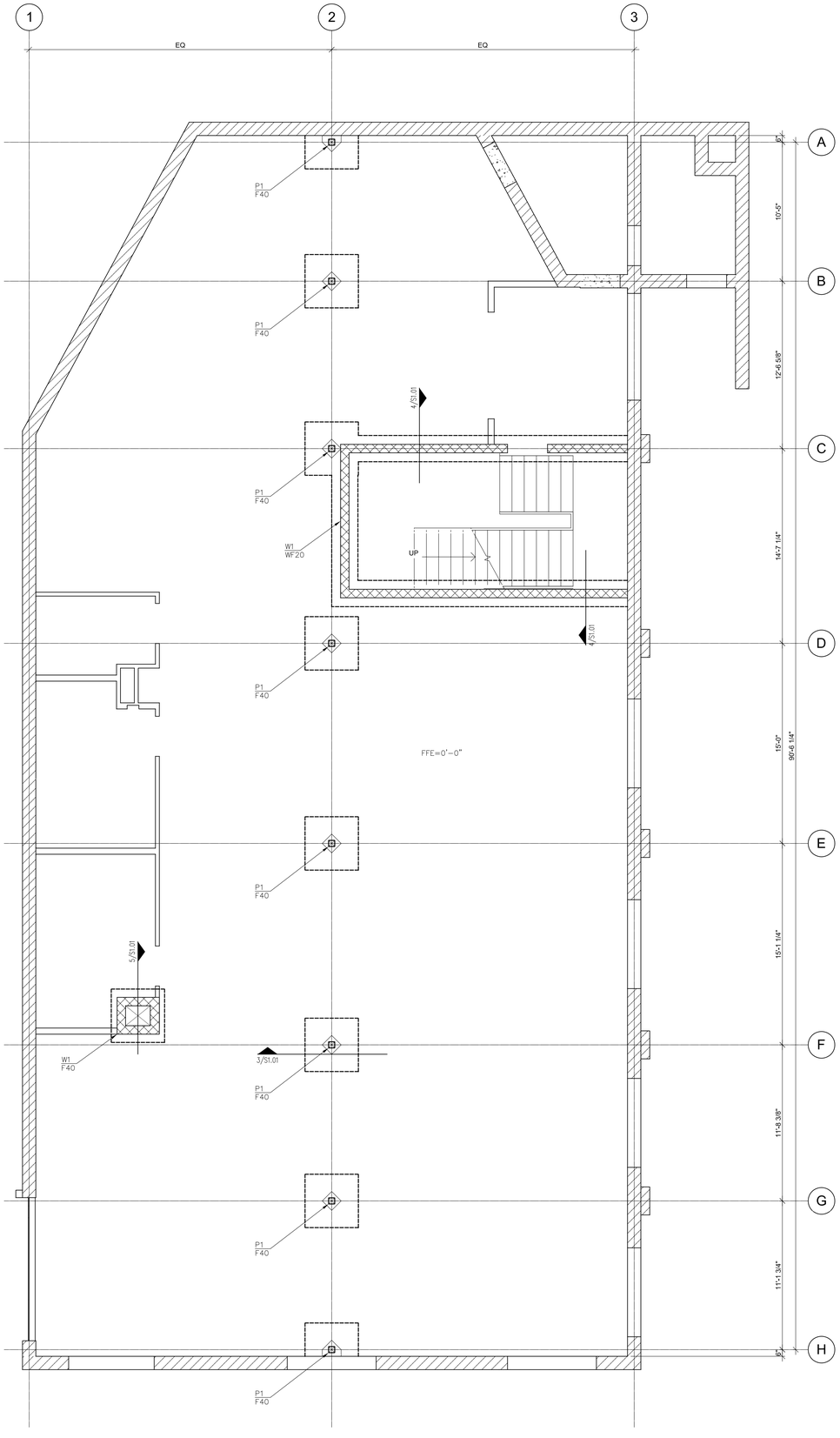

1 FIRST FLOOR PLAN
SCALE: 1/4" = 1'-0"

SHEET NOTES

1. REFERENCED FINISHED FLOOR ELEVATION IS 0'-0" (624'-4 3/16").
2. T/ FTG SHALL BE (-8"), MINIMUM FROM REFERENCED FFE.
3. FLOOR SLAB CONSTRUCTION UNLESS NOTED OTHERWISE:
   SOG-1, TYPICAL U.N.O.
   4" CONCRETE SLAB
   6x6-W2.1xW2.1 WWF
   4" CAPILLARY WATER BARRIER
4. FFE - INDICATES FINISHED FLOOR ELEVATION
   P1 - INDICATES PRESSURE TREATED 6x6 WOOD POST.
   W1 - INDICATES 8" CMU w/#5 VERT. @ 24"oc.
   WF1 - INDICATES WALL FTG 2'-0"x1'-0". REINFORCE w/ (3) #4, CONT.
   F40 - INDICATES FTG 4'-0"x4'-0"x1'-0". REINFORCE w/ (7) #4x3'-6", EACH WAY.
5. CONTRACT DRAWINGS SHALL NOT BE USED FOR SHOP DRAWINGS.
6. SEE 19/S1.01 FOR TYPICAL LINTEL IN EXISTING MASONRY.
7. SEE 16/S1.01 FOR GENERAL NOTES.

ODA
overcash demmitt
2010 south tryon st. suite 1a
charlotte north carolina 28203
office.704.332.1615
web. www.oda.us.com

John L. Plummer Jr., P.E.
Structural Engineer
112 Old Statesville Road, South
Suite 108
Huntersville, North Carolina 28078
phone: 704.948.0766 e-mail: john@jlpjrpe.com

C:\Users\jplumer\Desktop\20-E Transmit Files\152960-FtMillTheater-Kimsteel.rvp-1402997.jpg

Fort Mill Theater Renovation-Phase I

100 Main Street
Fort Mill, SC 29715

FOR CONSTRUCTION
ISSUE DATE: 04/08/16

No.	Description	Date

FOUNDATION PLAN

S2.01

Copyright 2016 Overcash Demitt Architects
ODA No. 152960

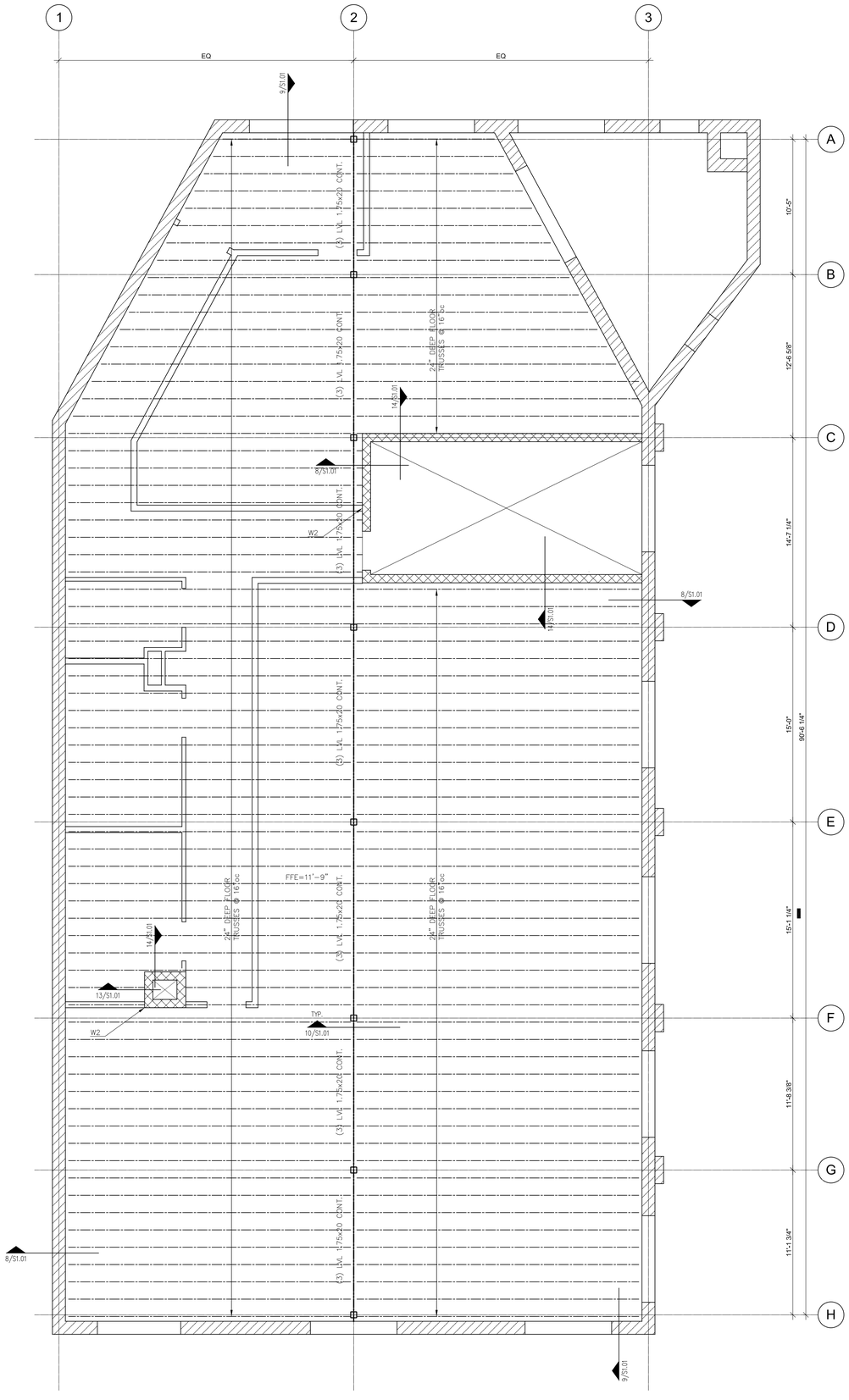

1 SECOND FLOOR PLAN
SCALE: 1/4" = 1'-0"

SHEET NOTES

1. REFERENCED FINISHED FLOOR ELEVATION IS 11'-9" (636'-1 3/16").
2. CONTRACT DRAWINGS SHALL NOT BE USED FOR SHOP DRAWINGS.
3. FFE – INDICATES FINISHED FLOOR ELEVATION
   P1 – INDICATES PRESSURE TREATED 6x6 WOOD POST.
   W2 – INDICATES 8" CMU w/#4 VERT. @ 24"oc.
4. SEE 18/S1.01 FOR PLYWOOD DECKING.
5. SEE 19/S1.01 FOR TYPICAL LINTEL IN EXISTING MASONRY.
6. SEE 16/S1.01 FOR GENERAL NOTES.

ODA
overcash demmitt
2010 south tryon st. suite 1a
charlotte north carolina 28203
office.704.332.1615
web. www.oda.us.com

John L. Plummer Jr., P.E.
Structural Engineer
112 Old Statesville Road, South
Suite 108
Huntersville, North Carolina 28078
phone: 704.948.0766 e-mail: john@jlpjrpe.com

C:\Users\jpriest\Desktop\20-C Transmit Files\152960-FMHSTheater-Kimstaf.rvp-1402800.jpg

Fort Mill Theater Renovation-Phase I

100 Main Street
Fort Mill, SC 29715

FOR CONSTRUCTION
ISSUE DATE: 04/08/16

No.	Description	Date

SECOND FLOOR FRAMING PLAN

S2.02

Copyright 2016 Overcash Demitt Architects
ODA No. 152960

HVAC GENERAL NOTES

1. FURNISH ALL LABOR, MATERIAL AND EQUIPMENT REQUIRED FOR THE COMPLETE INSTALLATION AND OPERATION OF ALL SYSTEMS IN THIS SECTION OF WORK IN ACCORDANCE WITH RECOMMENDED PRACTICE AND ALL APPLICABLE CODES.
2. DO NOT SCALE DRAWINGS. SEE ARCHITECTURAL DRAWINGS & REFLECTED CEILING PLANS FOR EXACT LOCATION OF DOORS, WINDOWS, CEILING DIFFUSERS, ETC.
3. ALL MECHANICAL PERMITS AND INSPECTION FEES SHALL BE OBTAINED AND PAID FOR BY THE MECHANICAL CONTRACTOR.
4. MECHANICAL CONTRACTOR SHALL GUARANTEE ALL WORK AND MATERIALS FOR ONE YEAR, EFFECTIVE THE DAY THE PROJECT IS ACCEPTED BY THE OWNER. REFRIGERANT COMPRESSORS SHALL BE GUARANTEED FOR FIVE YEARS.
5. DRAWINGS ARE DIAGRAMMATIC AND MAY NOT SHOW ALL REQUIRED FITTINGS. CONTRACTOR IS RESPONSIBLE FOR COORDINATING THE TYPE, SIZE AND LOCATION OF ALL AIR DEVICES, DUCTWORK, PIPING AND EQUIPMENT WITH THE CEILING PLAN, LIGHTS, STRUCTURAL ELEMENTS AND OTHER TRADES. CONTRACTOR TO FURNISH AND INSTALL ALL BENDS, OFFSETS, ELBOWS, ETC. AS REQUIRED. VERIFY ALL CLEARANCES PRIOR TO FABRICATING DUCTWORK OR ORDERING EQUIPMENT.
6. CONTRACTOR IS RESPONSIBLE FOR PROVIDING MATERIALS AND INSTALLING THE WORK IN ACCORDANCE WITH ALL APPLICABLE LOCAL, STATE AND NATIONAL CODES.
7. DUCTWORK
   - A. ALL DUCTWORK SHALL BE GALVANIZED SHEET METAL CONSTRUCTED IN ACCORDANCE WITH SMACNA STANDARDS WITH A MINIMUM PRESSURE CLASSIFICATION OF 2", SEAL CLASS C, WITH A MAXIMUM LEAKAGE RATE OF 5%.
   - B. ALL SQUARE ELBOWS SHALL HAVE TURNING VANES.
   - C. ALL DUCT DIMENSIONS SHOWN ARE INTERIOR CLEAR DIMENSIONS.
   - D. PROVIDE A MANUAL BALANCING DAMPER AT ALL SUPPLY AND RETURN BRANCH TAKEOFFS.
   - E. FLEXIBLE DUCT, IF SHOWN ON DRAWINGS, SHALL BE INSULATED ROUND DUCT WITH AN OUTER GLASS REINFORCED SILVER MYLAR JACKET ENCLOSING MIN. 1½" THICK GLASS FIBER INSULATION AROUND A CONTINUOUS INNER LINER, AND SHALL CONFORM TO THE REQUIREMENTS OF U.L. 181 FOR CLASS 1 FLEXIBLE AIR DUCTS. MAXIMUM LENGTH OF FLEXIBLE DUCT SHALL BE 6 FEET. "R" VALUE SHALL MEET/EXCEED ENERGY CODE (R=8)
   - F. ALL SHEET METAL DUCTWORK WITHIN 10' OF THE AIR HANDLING UNIT SHALL BE LINED WITH DUCT LINER. ALL REMAINING SUPPLY, OUTSIDE AIR AND EXTERIOR DUCTS SHALL BE EITHER INTERNALLY LINED OR EXTERNALLY INSULATED WITH DUCT WRAP. PROVIDE AN ADDITIONAL 1" OF DUCT WRAP AND AN ALUMINUM JACKET FOR ALL EXTERIOR DUCT.
   - G. ALL DUCT INSULATION SHALL BE RUN CONTINUOUSLY THROUGH FLOORS AND PARTITIONS.
8. PIPING
   - A. CONDENSATE DRAINS SHALL BE SCHEDULE 40 PVC OR TYPE L COPPER WITH SOLDERED JOINTS.
   - B. REFRIGERANT PIPING SHALL BE TYPE ACR WROUGHT COPPER WITH WROUGHT COPPER FITTINGS AND BRAZED JOINTS.
9. INSULATION
   - A. DUCT LINER – FIBROUS GLASS DUCT LINER, MINIMUM 1" THICK WITH R-VALUE TO MEET LOCAL ENERGY CODE, WITH COATED SURFACE EXPOSED TO AIR STREAM. APPLY WITH MECHANICAL FASTENERS AND 100% COVERAGE OF ADHESIVE.
   - B. DUCT WRAP – MINERAL FIBER BLANKET, MINIMUM 1½" THICK WITH R-VALUE TO MEET LOCAL ENERGY CODE, WITH REINFORCED FOIL AND PAPER VAPOR RETARDANT JACKET. APPLY WITH MECHANICAL FASTENERS AND ADHESIVE.
   - C. INTERIOR CONDENSATE DRAINS – INSULATE WITH ½" THICK FLEXIBLE ELASTOMERIC PIPE INSULATION.
   - D. REFRIGERANT SUCTION LINES – INSULATE WITH 1" THICK FLEXIBLE ELASTOMERIC PIPE INSULATION. PROVIDE ALUMINUM JACKET FOR EXTERIOR INSULATION.
   - E. AIR DISTRIBUTION – INSULATE TOP SIDE AS REQUIRED BY ENERGY CODE.
10. ALL PIPING, DUCTS, VENTS, ETC., EXTENDING THROUGH WALLS & ROOF SHALL BE FLASHED & COUNTER-FLASHED IN A WATERPROOF MANNER.
11. EXTEND ALL CONDENSATE DRAINS TO JANITORS SINK, FLOOR DRAIN, SPLASH BLOCK OR AS REQUIRED PER CODE. DRAINS FROM AHU'S SHALL BE TRAPPED. SLOPE 1/8" PER FOOT.
12. LOCATE ALL THERMOSTATS AND SWITCHES 4'-0" ABOVE FINISHED FLOOR. FURNISH A THERMOSTAT FOR EVERY DEVICE REQUIRING ONE WHETHER SHOWN ON DRAWINGS OR NOT.
13. ALL EQUIPMENT SHALL BE INSTALLED PER CODE & MANUFACTURER'S REQUIREMENTS FOR SERVICE AND ACCESS CLEARANCES.
14. ALL EQUIPMENT SHALL BE U.L LISTED.
15. MECHANICAL CONTRACTOR SHALL BALANCE SYSTEM TO AIR QUANTITIES INDICATED ON PLANS AND PROVIDE A COMPETE BALANCING REPORT IN ACCORDANCE WITH NEBB OR AABC STANDARDS.
16. ALL CONTROL WIRING SHALL BE BY MECHANICAL CONTRACTOR.
17. EACH AIR DISTRIBUTION SYSTEM SHALL BE PROVIDED WITH A MANUAL CONTROL TO STOP THE SUPPLY AND RETURN FANS IN CASE OF AN EMERGENCY. THE CONTROL DEVICE SHALL BE MOUNTED IN A READILY ACCESSIBLE LOCATION AND CLEARLY IDENTIFIED.
18. PROVIDE A CLEAN SET OF FILTERS FOR ALL AIR HANDLING EQUIPMENT AT SUBSTANTIAL COMPLETION.
19. MAINTAIN A MINIMUM 10'-0" BETWEEN OUTDOOR AIR INTAKES AND EXHAUST FAN DISCHARGE AND PLUMING VENTS, ETC. FIELD COORDINATE.
20. ROOF CURBS SHALL HAVE A BASE THAT FITS SLOPE OF ROOF AS REQUIRED. TOP OF CURB SHALL BE LEVEL. SEE STRUCTURAL PLANS FOR SLOPE INFORMATION.
21. PROVIDE 4" THICK CONCRETE PAD FOR ALL GROUND MOUNTED OUTDOOR HVAC UNITS. PADS SHALL BE MINIMUM 6" LARGER THAN UNIT ON ALL SIDES.
22. RUN DUCT UP WITHIN STRUCTURE OR THROUGH JOIST WEBS WHERE POSSIBLE & WHERE REQUIRED TO MAINTAIN CEILING HEIGHTS. PROVIDE OFFSETS IN DUCT WHERE REQ'D WITH MAX. 45° ELBOWS. MAKE BRANCH TAPS OFF TOP, SIDES OR BOTTOM AS REQ'D. NO BACK TO BACK 90° ELBOWS ALLOWED.
23. REFRIGERANT PIPING SHALL BE SIZED & INSTALLED IN ACCORDANCE WITH THE MANUFACTURERS RECOMMENDATIONS AND INSTALLATION INSTRUCTIONS.
24. ALL EQUIPMENT SHALL BE LABELED ACCORDING TO NUMBERING / IDENTIFICATION SYSTEM ON PLANS.

MECHANICAL LEGEND

SQUARE CEILING DIFFUSER	DOOR UNDERCUT
EXHAUST OR RETURN GRILLE	DOOR LOUVER
SIDEWALL DIFFUSER	THERMOSTAT/CONTROL
EXHAUST FAN	SMOKE DETECTOR
20X10 RECTANGULAR DUCT	24"ø 2400 DIFFUSER SYMBOL
FLEXIBLE DUCT	CONNECT TO EXISTING
ROUND RIGID DUCT	PULL STATION
TURNING VANES	
20X10 EXISTING DUCT	

SPLIT SYSTEM HEAT PUMP UNIT SCHEDULE

UNIT DESIG. AH/CU	AREA SERVED	AIR HANDLING UNIT DATA: MANUFACTURER & MODEL #	TOTAL CFM	MIN. OA CFM/	MAX. E.S.P. (IN.WG)	FAN RPM	ELECTRICAL DATA: FAN HP	FAN VOLT/PH	CONDENSING UNIT: MANUFACTURER & MODEL #	ELECTRICAL DATA: VOLT/PH	MCA	MAX FUSE	COOLING CAPACITY: TOTAL MBH	SENS. MBH	SEER	HEATING CAPACITY: INPUT KW	OUTPUT MBH	AUX. HEATER: KW	VOLTAGE	FILTER DATA: TYPE	THICK IN.	NOTES
AH-1 HP-1	UNITS	TRANE GAM580B30	1000	250	0.80	BY MFG	1/3	240/1ø	TRANE 4TWR5030G1	240/1ø	15.0	25	31.0	24.3	15.0	2.66	29.2	7.2	240/1ø	T.A.	1"	1-7
AH-2 HP-2	UNITS	TRANE GAM580B36	1200	–	0.80	BY MFG	1/2	240/1ø	TRANE 4TWR5036G1	240/1ø	18.0	30	35.4	27.8	15.0	2.95	32.6	7.2	240/1ø	T.A.	1"	1-7
AH-3 HP-3	UNITS	TRANE GAM580B36	1200	–	0.80	BY MFG	1/2	240/1ø	TRANE 4TWR5036G1	240/1ø	18.0	30	35.4	27.8	15.0	2.95	32.6	7.2	240/1ø	T.A.	1"	1-7

NOTES:

1. COOLING CAP. RATED IN ACCORDANCE WITH ARI STD. 210/290 AT 95°F AMBIENT OUTDOOR AIR TEMP., 80°F DRY BULB, 67° WET BULB ENTERING AIR TEMP. & NOM. AIR QTY. LISTED.
2. PROVIDE 7-DAY, AUTO. CHANGEOVER HEAT/COOL PROGRAMMABLE T'STAT & MATCHING SUBBASE FOR EACH UNIT. THERMOSTAT TO BE HONEYWELL T-7300 OR AS APPROVED BY ENGINEER
3. REFRIG. PIPING TO BE SIZED PER TOTAL INSTALL. EQUIV. LENGTH. LONG-LINE APP.TO BE PROVIDED WHENEVER MFG. RECOMM. LENGTHS ARE EXCEEDED, INCL. LIQ. LINE SOLENOID VALVES, ACCUMULATOR, ETC. MAX T.E.L. IS 100'
4. PROVIDE NEW THROW-AWAY FILTERS FOR EACH UNIT.
5. SINGLE POINT ELECTRICAL CONNECTION
6. OUTDOOR UNITS SHALL HAVE A MINIMUM 15.0 SEER RATING
7. PROVIDE HEAT PUMP KIT WITH AIR HANDLER.

NOTES:

1. COOLING CAPACITIES ARE RATED IN ACCORDANCE WITH ARI STANDARD 210/290 AT 95°F AMBIENT OUTDOOR AIR TEMP., 80°F DRY BULB, 67° WET BULB ENTRANCE AIR TEMP., AND NOMINAL AIR QUANTITY LISTED. EFFICIENCIES ARE RATED AT ARI CONDITIONS IN ACCORDANCE WITH ARI 360-86.
2. PROVIDE A 7-DAY, AUTOMATIC CHANGEOVER HEAT/COOL PROGRAMMABLE THERMOSTAT AND MATCHING SUBBASE FOR EACH UNIT.
3. PROVIDE FACTORY AIR SIDE DRY BULB ECONOMIZER SECTION WITH FULL BAROMETRIC RELIEF DAMPER FOR EACH UNIT.
4. PROVIDE NEW FILTERS FOR EACH UNIT.
5. COORDINATE EXACT ORIENTATION OF DUCT OPENINGS WITH STRUCTURAL STEEL. SOME UNITS MAY NEED TO BE ROTATED 90 OR 180 DEGREES. ADJUST DUCTWORK FOR EXACT ORIENTATION.
6. PROVIDE FACTORY ROOF CURB, INSTALL PER MANUFACTURER'S RECOMMENDATIONS.
7. PROVIDE THE FOLLOWING FACTORY INSTALLED OPTIONS:
   - A. THROUGH-THE-BASE ELECTRICAL SERVICE.
   - B. UNIT MOUNTED, NON-FUSED, DISCONNECT SWITCH.
   - C. POWERED CONVENIENCE GFIC OUTLET (115V/15A).
8. PROVIDE COMPLIANCE WITH NC MECH CODE 307.2.3.1 AND PROVIDE WATER-LEVEL MONITORING DEVICE.

DUCTLESS MINI SPLIT UNIT SCHEDULE

UNIT DESIG. AH/CU	AIR HANDLING UNIT DATA: MANUFACTURER & MODEL #	NOM. TOTAL CFM	MIN. OA CFM	MIN. E.S.P. (IN.WG)	ELECTRICAL DATA: FAN FLA	FAN VOLT/PH	CONDENSING UNIT: MANUFACTURER & MODEL #	ELECTRICAL DATA: VOLT/PH	MCA	MAX FUSE	COOLING CAPACITY: TOTAL MBH	SENS. MBH	SEER	HEATING CAPACITY: OUTPUT BTUH	HSPF	AUX. HEATER: KW MBH	VOLTAGE	COND. DRAIN	NOTES
AH-4 HP-4	MITSUBISHI MSZ-FH09NA	160	0	–	0.6	208/1ø	MITSUBISHI MUZ-FH09NA	208/1ø	11	15	9000	–	30.5	12200	13.5	– –	–	1"	1-5

NOTES:

1. PROVIDE NEW FILTER
2. PROVIDE UNIT DISCONNECT
3. OUTDOOR UNITS SHALL HAVE A MINIMUM 10.0 EER RATING
4. SINGLE POINT ELEC. POWER CONNECTION FOR AIR HANDLER
5. REFRIG. PIPING TO BE SIZED PER TOTAL INSTALL. EQUIV. LENGTH. LONG-LINE APP.TO BE PROVIDED WHENEVER MFG. RECOMM. LENGTHS ARE EXCEEDED, INCL. LIQ. LINE SOLENOID VALVES, ACCUMULATOR, ETC. MAX T.E.L. IS 100'

DIFFUSER SCHEDULE

SYMBOL	CFM	NECK SIZE	MODULE SIZE	FRAME TYPE	PATTERN	DAMPER	MATERIAL	SERVICE	FINISH	MANUFACTURER & MODEL No./ie.	NOTES
A	AS NOTED	AS NOTED	24x24	LAY-IN	–	YES	STEEL	SUPPLY	NOTE 2	TITUS TMS	1
B	AS NOTED	AS NOTED	24x24	LAY-IN	–	YES	STEEL	RETURN	NOTE 2	TITUS PAR	1
											1

NOTES:

1. DIFFUSER DESIGNATIONS ON PLANS AS FOLLOWS:
   DIFFUSER OR NECK SIZE. — 8x4 / 75 — A — DIFFUSER TYPE AS NOTED ABOVE
   AIR QUANTITY
2. FINISH TO MATCH CEILING OR WALL

FAN SCHEDULE

UNIT NO.	SERVICE	AREA SERVED	CFM	S.P.	RPM	TYPE & ARRANGEMENT	MIN. MOTOR HP & VOLTAGE	MANUFACTURER & MODEL No./ie.	DRIVE	CONTROL SCHEME	REMARKS
EF-1	EXHAUST	SEE PLAN	100	0.25	1350	CEILING	173 WATTS 120/1ø	GREENHECK MODEL SP-B150	DIRECT	A	1 2 3 4
EF-2	EXHAUST	SEE PLAN	150	0.25	1350	CEILING	173 WATTS 120/1ø	GREENHECK MODEL SP-B150	DIRECT	A	1 2 3 4

NOTES:

1. SCREEN
2. BACKDRAFT DAMPER
3. SPEED CONTROLLER
4. INTEGRAL DISCONNECT SWITCH

CONTROL OPTIONS:

A. CONTROL W/ ROOM LIGHTS

ELECTRIC HEATER SCHEDULE

TAG	LOCATION	# OF HEATERS	CAPACITY BTUH	ELECTRICAL DATA: W	V	PH	HZ	MANUFACTURER & MODEL No.	NOTES
EWH-1	SEE PLAN	1	10,230	3000	208	1	60	MARKEL HF3326TD-RP	1,2,3,4
UH-1	SEE PLAN	1	10,230	3000	208	1	60	MARKEL F1F5103N	4,5

NOTES:

1. INTERNAL THERMOSTAT
2. SURFACE MOUNT
3. MOUNT HEATER @ 12" A.F.F.
4. DISCONNECT
5. MOUNT HEATER @ 9 FEET A.F.F.

ODa
overcash demmitt
2010 south tryon st. suite 1a
charlotte north carolina 28203
office.704.332.1615
web. www.oda.us.com

SOUTH CAROLINA PROFESSIONAL ENGINEER No. 23609 JEFFREY B. CHRISTIAN 4/8/16

Kuester COMMERCIAL

Fort Mill Theater Renovation-Phase I

100 Main Street
Fort Mill, SC 29715

FOR CONSTRUCTION
ISSUE DATE: 04/08/16

No.	Description	Date

MECHANICAL COVER SHEET

M0.11

Copyright 2016 Overcash Demitt Architects
ODA No. 152960

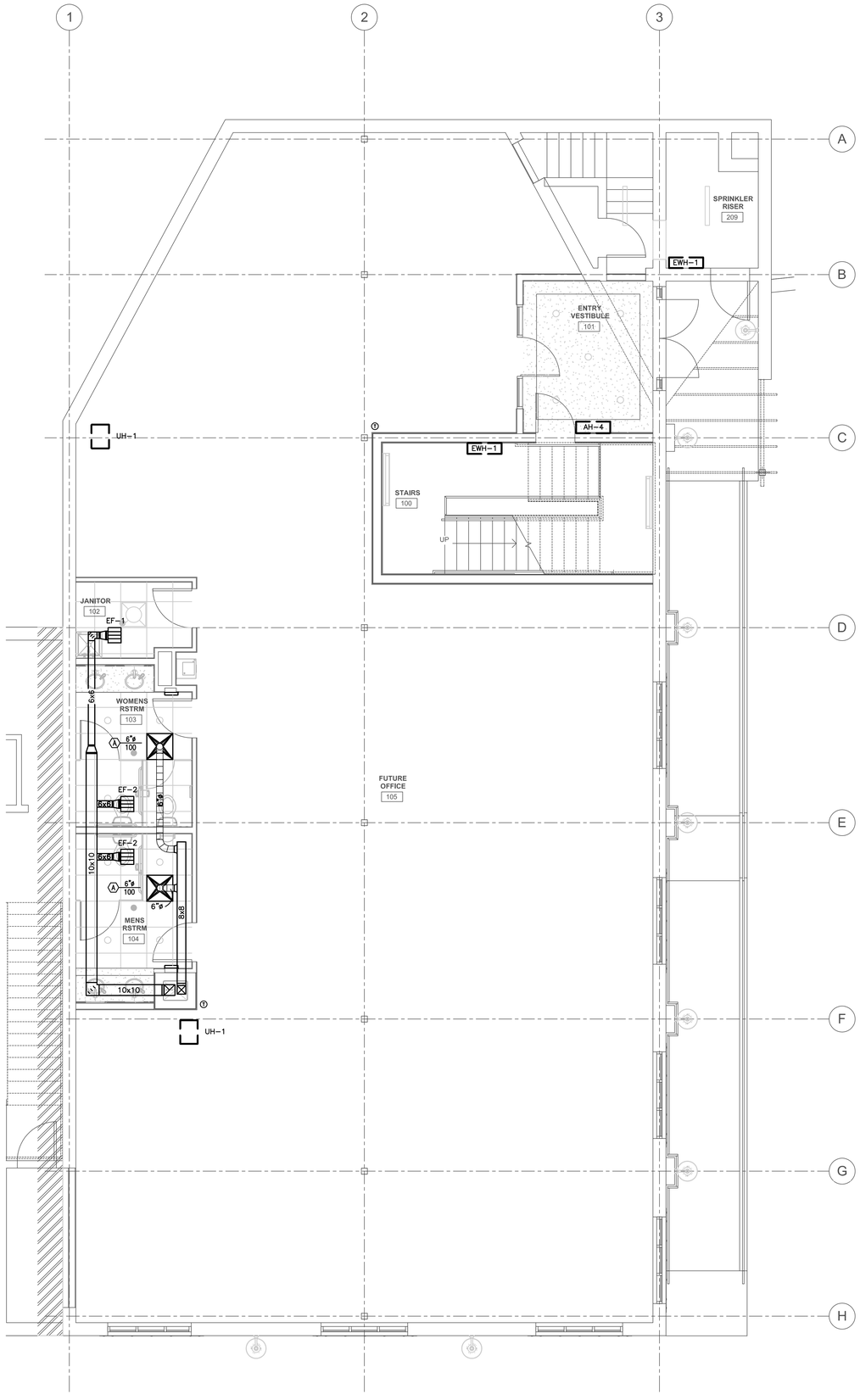

1 M1.11 1ST FLOOR MECHANICAL PLAN
1/4"=1'-0"

ODA
overcash demmitt
2010 south tryon st. suite 1a
charlotte north carolina 28203
office.704.332.1615
web. www.oda.us.com

SOUTH CAROLINA PROFESSIONAL ENGINEER
No. 23809
JEFFREY B. CHRISTIAN
4/8/16

Kuester
COMMERCIAL

Fort Mill Theater Renovation-Phase I

100 Main Street
Fort Mill, SC 29715

FOR CONSTRUCTION
ISSUE DATE: 04/08/16

No.	Description	Date

1ST FLOOR MECHANICAL PLAN

M1.11

Copyright 2016 Overcash Demitt Architects

ODA No. 152960

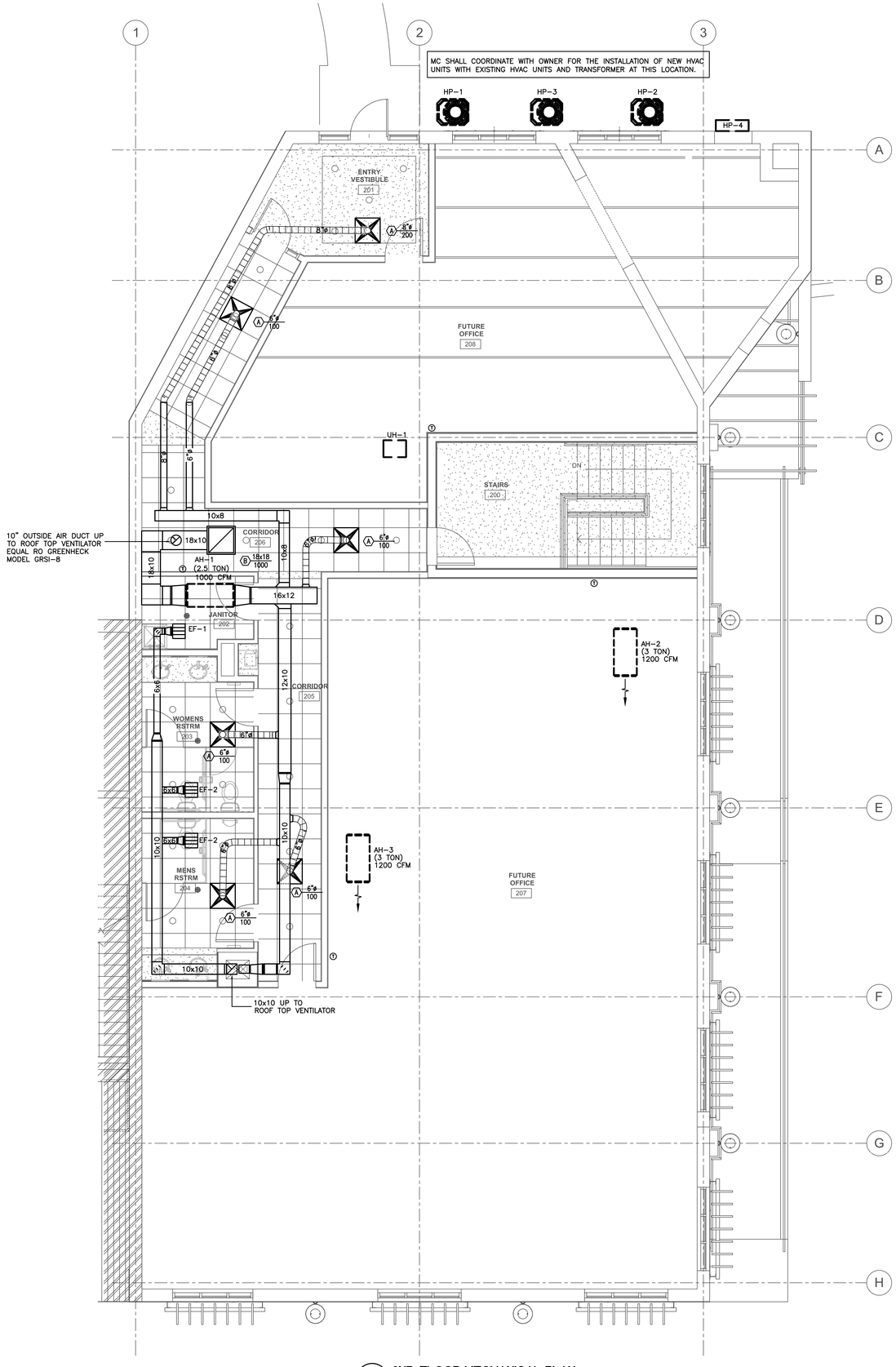

1 M1.12 2ND FLOOR MECHANICAL PLAN
1/4"=1'-0"

ODa
overcash demmitt
2010 south tryon st. suite 1a
charlotte north carolina 28203
office.704.332.1615
web. www.oda.us.com

Kuester COMMERCIAL

Fort Mill Theater Renovation-Phase I

100 Main Street
Fort Mill, SC 29715

FOR CONSTRUCTION
ISSUE DATE: 04/08/16

No.	Description	Date

2ND FLOOR MECHANICAL PLAN

M1.12

Copyright 2016 Overcash Demitt Architects
ODA No. 152960

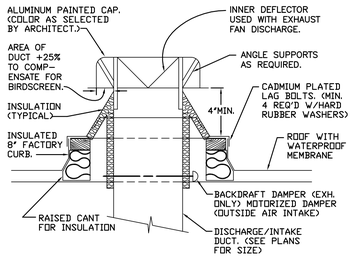

NOTE: THIS DETAIL IS TYPICAL FOR ALL EXH. & O.A. INTAKE DUCTS

1 M3.00 ROOF DISCHARGE/INTAKE DETAIL
N.T.S.

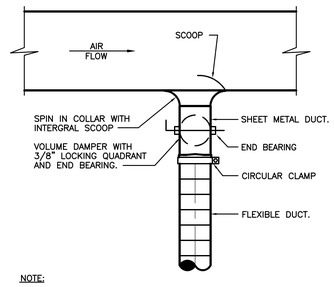

NOTE:

1. SEE FLOOR PLANS AND SPECIFICATIONS FOR DUCT INSULATION REQUIREMENTS.

2 M3.00 ROUND SUPPLY TAP TO SINGLE AIR OUTLET
N.T.S.

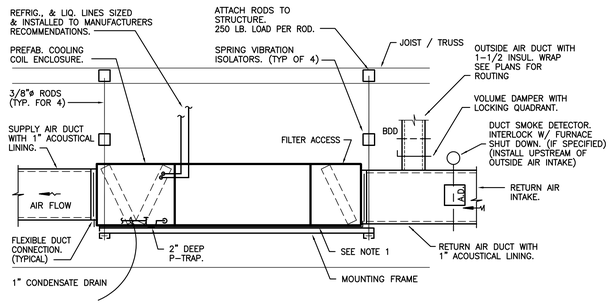

NOTES:

1. AUXILIARY DRAIN PAN WITH MICROFLOAT SWITCH. INTERLOCK FLOAT SWITCH WITH FURNACE. INSTALL FLOAT SWITCH IN ONE CORNER OF PAN AND TILT PAN TO THAT CORNER.

3 M3.00 HORIZONTAL AIR HANDLING UNIT DETAIL
N.T.S.

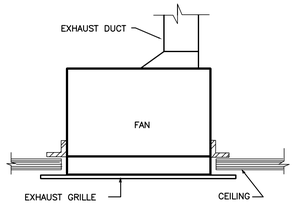

4 M3.00 CEILING EXHAUST FAN DETAIL
N.T.S.

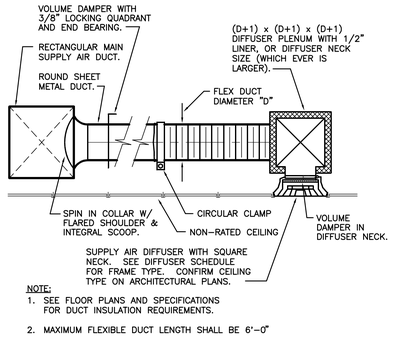

NOTE:

1. SEE FLOOR PLANS AND SPECIFICATIONS FOR DUCT INSULATION REQUIREMENTS.
2. MAXIMUM FLEXIBLE DUCT LENGTH SHALL BE 6'-0"

5 M3.00 SUPPLY AIR DIFFUSER DETAIL
NTS

ODA
overcash demmitt
2010 south tryon st. suite 1a
charlotte north carolina 28203
office.704.332.1615
web. www.oda.us.com

Kuester COMMERCIAL

Fort Mill Theater Renovation-Phase I

100 Main Street
Fort Mill, SC 29715

FOR CONSTRUCTION
ISSUE DATE: 04/08/16

No.	Description	Date

MECHANICAL DETAILS

M3.00

Copyright 2016 Overcash Demitt Architects
ODA No. 152960

GENERAL ELECTRICAL NOTES

1. ALL ELECTRICAL WORK SHALL BE IN ACCORDANCE WITH THE LATEST EDITION OF THE NATIONAL ELECTRICAL CODE AND ALL LOCAL AND STATE CODES.
2. ALL MATERIAL, EQUIPMENT & APPLIANCES SHALL BE NEW AND SHALL CONFORM TO THE STANDARDS OF THE UNDERWRITER'S LABORATORIES, INC., AND THE NATIONAL MANUFACTURERS ASSOCIATION.
3. ALL ELECTRICAL PERMITS AND INSPECTION FEES SHALL BE OBTAINED AND PAID FOR BY THE ELECTRICAL CONTRACTOR.
4. DRAWINGS ARE DIAGRAMMATIC ONLY AND INDICATE ONLY THE GENERAL ARRANGEMENT. SEE ARCHITECTURAL DRAWINGS FOR EXACT DIMENSIONS (EXCEPT AS NOTED).
5. ELECTRICAL CONTRACTOR SHALL GUARANTEE ALL WORK AND MATERIALS FOR A MINIMUM OF ONE YEAR. THE ONE YEAR WARRANTY IS TO CORRESPOND WITH THE GENERAL CONTRACTOR'S ONE YEAR WARRANTY WITH THE OWNER & BUYERS.
6. ELECTRICAL CONTRACTOR SHALL MAKE ALL ELECTRICAL POWER CONNECTIONS TO HVAC, PLUMBING AND OTHER EQUIPMENT AS REQUIRED.
7. A COMPLETE GROUNDING SYSTEM SHALL BE PROVIDED AND INSTALLED IN ACCORDANCE WITH ARTICLE 250 OF THE NEC, AND AS SHOWN ON THE DRAWINGS.
8. ALL CUTTING AND PATCHING OF WALLS AND FLOORS FOR ELECTRICAL EQUIPMENT SHALL BE THE RESPONSIBILITY OF THE ELECTRICAL CONTRACTOR.
9. ALL WIRING REQUIRED BY CODE TO BE IN CONDUIT SHALL BE INSTALLED IN RC, IMC, EMT OR PVC CONDUIT (AS ALLOWED BY CODE). IF APPROVED BY OWNER, MC CABLE CAN BE USED WHERE ALLOWED BY CODE.
10. CONDUCTORS SHALL BE COPPER RATED AT NOT LESS THAN 600 VOLTS. MINIMUM SIZE SHALL BE #12 AWG UNLESS OTHERWISE NOTED ON THE DRAWINGS. ALL WIRE #8 AWG AND LARGER SHALL BE STRANDED. ALL CONDUCTORS #10 AND SMALLER SHALL BE SOLID, UNLESS OTHERWISE NOTED.
11. BRANCH CIRCUIT CONDUCTORS SHALL BE TYPE THHN OR THWN AS REQUIRED.
12. PROVIDE A PULL WIRE IN ALL EMPTY CONDUITS.
13. PROVIDE A TYPED DIRECTORY IN ALL PANEL BOARDS CLEARLY DESCRIBING THE LOCATION OF AND TYPE OF LOAD BEING SERVED FOR ALL CIRCUITS.
14. PROVIDE ENGRAVED PHENOLIC NAMEPLATES FOR ALL PANEL BOARDS AND DISCONNECT SWITCHES, WHITE LETTERS ON BLACK BACKGROUND.
15. FUSES 0 – 600 AMPS SHALL BE UL CLASS "RK-1" LOW PEAK DUAL ELEMENT TIME DELAY WITH 200,000 AMPERE INTERRUPTING RATING AS MANUFACTURED BY BUSS. UNLESS NOTED OTHERWISE
16. VERIFY ALL REQUIREMENTS AND COORDINATE EXACT LOCATION OF INCOMING ELECTRICAL SERVICE WITH LOCAL POWER COMPANY PRIOR TO PROJECT START UP. NOTIFY ENGINEER OF ANY CHANGES.
17. PROVIDE SCHEDULE 40 PVC CONDUIT UNDERGROUND FROM TELEPHONE EQUIPMENT ROOM TO CONNECTION POINT AS DIRECTED BY LOCAL TELEPHONE COMPANY.
18. ALL TERMINALS, SPLICING CONNECTORS, LUGS, ETC. SHALL BE IDENTIFIED FOR USE WITH THE MATERIAL (CU/AL) OF THE CONDUCTOR AND SHALL BE PROPERLY INSTALLED. ALL TERMINALS, SPLICING CONNECTORS, LUGS, ETC. SHALL BE IDENTIFIED FOR USE WITH 75°C RATED CONDUCTORS.
19. THE ELECTRICAL CONTRACTOR SHALL BE RESPONSIBLE FOR PROTECTING ALL ELECTRICAL EQUIPMENT FROM FOREIGN MATERIAL DURING CONSTRUCTION (PAINT, SPACKLE, ETC.).
20. PENETRATIONS OF REQUIRED SMOKE PARTITIONS SHALL BE SEALED USING METHODS APPROVED UNDER THE STATE BUILDING CODE. COORDINATION WITH THE GENERAL CONTRACTOR SHALL BE MAINTAINED TO INSURE THAT THIS SMOKE STOPPING IS ACCOMPLISHED.
21. WHERE PENETRATIONS ARE MADE THROUGH A REQUIRED FIRE-RESISTIVE WALL, FLOOR, OR PARTITION FOR THE PURPOSE OF RUNNING RACEWAY CARRYING ELECTRICAL, TELEPHONE, TELEVISION, OR LOCAL COMMUNICATION AND/OR SIGNALING CIRCUITS, THE OPENING AROUND THE RACEWAY SHALL BE FIRE STOPPED PER THE STATE BUILDING CODE. COORDINATION WITH THE GENERAL CONTRACTOR SHALL BE MAINTAINED TO INSURE THAT THIS FIRE STOPPING IS ACCOMPLISHED. USE U.L. APPROVED ASSEMBLIES OF APPROPRIATE TYPE AND RATING ONLY (SEE A2.0 FOR ASSEMBLIES).
22. IN REQUIRED FIRE RATED WALLS AND PARTITIONS, OPENINGS FOR INSTALLATION OF BOXES THAT ARE GREATER THAN 16 SQUARE INCHES SHALL BE PROTECTED AS REQUIRED BY U.L. COORDINATE CLOSELY WITH THE GENERAL CONTRACTOR TO INSURE THE INTEGRITY OF THE U.L. RATING IS MAINTAINED.
23. WHERE A HOME RUN IS SHOWN THE CIRCUIT SHALL BE INSTALLED IN A DEDICATED CONDUIT, DO NOT COMBINE WITH OTHER CIRCUITS.
    WHERE A CIRCUIT HOMERUN IS NOT SHOWN THE CONTRACTOR SHALL COMBINE CIRCUITS AS FOLLOWS:

    A MAXIMUM OF THREE 20A BRANCH CIRCUITS OF DIFFERENT PHASES MAY BE COMBINED IN A COMMON HOMERUN SHARING A COMMON NEUTRAL OR WITH SEPARATE NEUTRALS, A TOTAL OF SIX CURRENT CARRYING CONDUCTORS MAXIMUM.

    ALL BRANCH CIRCUITS LARGER THAN 20A SHALL BE SEPARATELY HOMERUN TO THE PANEL. ALL HOME RUNS IN EXCESS OF 100' SHALL BE INCREASED ONE WIRE SIZE FROM THAT SHOWN FOR THE CIRCUIT, #10 AWG MINIMUM.
24. ALL EXIT SIGNS SHALL BE CIRCUITED TO AN UNSWITCHED LEG OF THE LOCAL LIGHTING CIRCUIT.
25. LOWER CASE LETTER(S) INDICATES SWITCHING DESIGNATION. UPPER CASE LETTER(S) INDICATES FIXTURE TYPE. NUMBER INDICATES CIRCUIT. WHERE DUAL SWITCHING IS DESIGNATED CONTROL ONE LAMP OF TWO LAMP FIXTURES AND THE CENTER LAMP(S) OF THREE AND FOUR LAMP FIXTURES TO ONE SWITCH, AND THE REMAINING LAMPS TO THE SECOND SWITCH. CIRCUIT NUMBERS, FIXTURE DESIGNATION AND SWITCHING ARE DESIGNATED AS FOLLOWS, FIXTURE SWITCHING AND CIRCUITING ARE TYPICAL FOR ALL LIGHT FIXTURES.
26. PROVIDE FLASH HAZARD SIGNAGE ON ALL NON-DWELLING ELECTRICAL PANELS.
27. SPACING AND LOCATION OF RECEPTACLES, SHALL AT A MINIMUM, BE IN ACCORDANCE WITH IBC AND NEC REQUIREMENTS FOR DWELLING UNITS. PLANS ARE FOR GENERAL ARRANGEMENT ONLY.

ELECTRICAL ABBREVIATIONS

18"	DIMENSION INDICATES HEIGHT ABOVE FINISHED FLOOR AT WHICH CENTER OF DEVICE IS TO BE MOUNTED.
AFF	ABOVE FINISHED FLOOR
AFG	ABOVE FINISHED GRADE.
EC	ELECTRICAL CONTRACTOR
FPN	FUSE PER EQUIPMENT NAMEPLATE REQUIREMENTS.
GC	GENERAL CONTRACTOR
GFI	INDICATES RECEPTACLE TO HAVE GROUND FAULT PROTECTION.
MC	MECHANICAL CONTRACTOR
PC	PLUMBING CONTRACTOR
WP	INDICATES DEVICE TO HAVE WEATHERPOOF COVER.
U.N.O.	UNLESS NOTED OTHERWISE
FACP	FIRE ALARM CONTROL PANEL
FAAN	FIRE ALARM ANNUNCIATOR PANEL
CH	COUNTER HEIGHT
NL	NIGHT LIGHT

ELECTRICAL SYMBOL SCHEDULE

	ELECTRICAL CONNECTION TO APPLIANCE OR EQUIPMENT.
	ELECTRICAL CONDUIT HOMERUN TO BRANCH PANELBOARD.
	ELECTRICAL CONDUIT RUN IN OR BELOW FLOOR SLAB.
J	JUNCTION BOX CEILING OR FLOOR MOUNTED
J	JUNCTION BOX WALL MOUNTED AT HEIGHT INDICATED ON DRAWINGS.
T	THERMOSTAT WALL MOUNTED AT 48" AFF.
$	SINGLE POLE SWITCH, 20A, 120/277 VOLT, +48" A.F.F. TO CENTER.
$3	3-WAY SWITCH, 20A, 120/277 VOLT, +48" A.F.F. TO CENTER.
$4	4-WAY SWITCH, 20A, 120/277 VOLT, +48" A.F.F. TO CENTER.
$F	PADDLE FAN SPEED CONTROL SWITCH. 120V, 1HP RATED.
$M	125V, 20A SINGLE PHASE MANUAL MOTOR STARTER WITH OVERLOADS
$O	WALL SWITCH OCCUPANCY SENSOR, +48"AFF.
$OC	DUAL TECHNOLOGY OCCUPANCY SENSOR, +48 AFF.
	DUPLEX RECEPTACLE, 20 AMP, 125 VOLT, +18" A.F.F. TO CENTER. "G" INDICATES GROUND FAULT CIRCUIT INTERRUPTING. "WP" INDICATES WEATHERPROOF. "C" INDICATES MOUNTED 6" ABOVE COUNTERTOP BACKSPLASH.
	DUPLEX RECEPTACLE, 20 AMP, 125 VOLT, FLUSH FLOOR MOUNTED WITH CHROME COVERPLATE.
	208V-1Ø, 30A OUTLET.
	DUPLEX GFI RECEPTACLE MOUNTED ABOVE COUNTER BACKSPLASH OR AT HEIGHT INDICATED.
P	POWER POLE FROM FLOOR TO CEILING. PROVIDE (2) DUPLEX AND (4) DATA OUTLETS AT 18" AFF FOR EACH POWER POLE.
	CONDUIT TURNED UP, AS VIEWED FROM LOAD.
	CONDUIT TURNED DOWN, AS VIEWED FROM LOAD.
MH-1	INDICATES EQUIPMENT CONNECTION. SEE EQUIPMENT CONNECTION SCHEDULE SHEET FOR ELECTRICAL CONNECTION INFORMATION. TEXT INDICATES EQUIPMENT BEING SERVED BY CONNECTION AS IDENTIFIED ON KITCHEN DRAWINGS AND SPECIFICATIONS.
TV	CABLE TELEVISION OUTLET, COORDINATE HEIGHT WITH OWNER. PROVIDE RG-58 CABLE TO CATV CABINET. PROVIDE DUPLEX RECEPTACLE ADJACENT TO TELEVISION. COORDINATE HEIGHT WITH OWNER.
	DUPLEX RECEPTACLE CONTROLLED BY SWITCH INDICATED. UPPER HALF OF RECEPTACLE IS SWITCHED. LOWER HALF OF RECEPTACLE IS UNSWITCHED.
W	TELEPHONE/DATA OUTLET, +18"AFF TO CENTER "W" INDICATES WALL MOUNTED AT 4'-8". STUB 3" CONDUIT ABOVE ACCESSIBLE CEILING.
60/3/FPN	HEAVY DUTY FUSIBLE/NON-FUSIBLE DISCONNECT SWITCH, NUMBERS INDICATE AMP RATING. PROVIDE NEMA 1 ENCLOSURE INSIDE. PROVIDE NEMA 3 ENCLOSURE FOR ALL SWITCHES LOCATED OUTSIDE. FPN = FUSE PER NAMEPLATE, NF = NON FUSED.
	MOTOR STARTER.
	PANELBOARD, SURFACE OR RECESS MOUNTED, SEE SCHEDULE FOR DETAILS.
	MOTOR OUTLET. SEE PLANS FOR SIZE.
	2' X 4' FLUORESCENT LIGHTING FIXTURE, SEE FIXTURE SCHEDULE FOR DETAILS.
	SURFACE MOUNTED FLUORESCENT STRIP. SEE FIXTURE SCHEDULE FOR DETAILS.
	1' X 4' FLUORESCENT LIGHTING FIXTURE, SEE FIXTURE SCHEDULE FOR DETAILS.
	CEILING MOUNTED TRACK LIGHTING FIXTURE, SEE SCHEDULE FOR DETAILS.
	WALL MOUNTED LIGHTING FIXTURE, SEE FIXTURE SCHEDULE FOR DETAILS.
	CEILING MOUNTED LIGHTING FIXTURE, SEE FIXTURE SCHEDULE FOR DETAILS.
FACP	FIRE ALARM CONTROL PANEL, SEMI-FLUSH MOUNTED.
ANN	FIRE ALARM SYSTEM ANNUNCIATOR PANEL, MH = +4'-0".
F	FIRE ALARM SYSTEM MANUAL PULL STATION, MH = +4'-0".
F	FIRE ALARM SYSTEM ALARM INDICATING DEVICE, HORN/STROBE, MH = +84". HORN SHALL BE 85dBA AT 10'-0" MINIMUM. STROBE SHALL BE 15cd U.O.N.
SD	FIRE ALARM SYSTEM SMOKE DETECTOR, CEILING MOUNTED, UNLESS OTHERWISE NOTED. SUBSCRIPT "R" INDICATES DEVICE SHALL BE USED FOR ELEVATOR RECALL FUNCTIONS. SUBSCRIPT "R" INDICATES DEVICE SHALL BE USED FOR ELEVATOR RECALL FUNCTIONS.
DD	FIRE ALARM SYSTEM DUCT MOUNTED SMOKE DETECTOR. PROVIDED BY E.C., INSTALLED BY M.C. AND WIRED BY E.C.
HD	FIRE ALARM SYSTEM HEAT DETECTOR, 135° RATE-OF-RISE, UNLESS OTHERWISE NOTED.
TS	TAMPER SWITCH, CONNECTED INTO FIRE ALARM SYSTEM. SEE FIRE ALARM RISER.
FS	FLOW SWITCH, CONNECTED INTO FIRE ALARM SYSTEM. SEE FIRE ALARM RISER.

LIGHTING FIXTURE SCHEDULE

MARK	MANUFACTURER	CATALOG NUMBER	LAMP NO.	LAMP TYPE	VOLTAGE	MOUNTING	BALLAST NO.	BALLAST TYPE	FIXTURE WATTS	NOTES
A	HE WILLIAMS	L60-L15C/835-CS/M-120	LED	1500 LM	120	RECESSED				6" RECESSED CAN
B		OWNER SELECTED PENDANT	LED	4000 LM	120	PENDANT				4' LINEAR PENDANT
		$250 ALLOWANCE								
C		OWNER SELECTED SCONCE	LED	1000 LM	120	SURFACE				BATHROOM VANITY SCONCE
		$250 ALLOWANCE								
D		OWNER SELECTED EXTERIOR SCONCE	LED		120	SURFACE				EXTERIOR SCONCE
		$250 ALLOWANCE								
F	HE WILLIAMS	50G-S22-L41/835-A12125-120	LED		120	RECESSED				2X2 LED
G	HE WILLIAMS	WMA-4-L65/835-AF-120	LED		120	WALL				4' WALL FIXTURE
		WITH EM/10W OPTION								WITH EMERGENCY
	HE WILLIAMS	EXIT-R-EM-WHT	LED		120	SURFACE				EXIT SIGN
	HE WILLIAMS	EMER-WHT	LED		120	SURFACE				EM WALLPACK
	HE WILLIAMS	EMER/DECO	LED		120	SURFACE				EMERGENCY EGRESS

FIXTURE SCHEDULE NOTES:
1. CATALOG NUMBERS AND MANUFACTURERS ARE TO INDICATE TYPE AND QUALITY OF FIXTURE DESIRED. SUBMIT CUTSHEETS OF ALTERNATE MANUFACTURERS FOR ARCHITECT AND OWNER APPROVAL PRIOR TO PURCHASE OF ANY FIXTURES.
2. COORDINATE FIXTURE TRIM WITH CEILING TYPE (ACOUSTIC OR GYPSUM).

ELECTRICAL SYSTEM AND EQUIPMENT

METHOD OF COMPLIANCE:

ENERGY CODE: PRESCRIPTIVE ☒ PERFORMANCE ☐
ASHRAE 90.1: PRESCRIPTIVE ☐ PERFORMANCE ☐

LIGHTING SCHEDULE:

LAMP TYPE REQUIRED IN FIXTURE	SEE FIXTURE SCHEDULE
NUMBER OF LAMPS IN FIXTURE	SEE FIXTURE SCHEDULE
BALLAST TYPE USED IN THE FIXTURE	SEE FIXTURE SCHEDULE
NUMBER OF BALLAST IN FIXTURE	SEE FIXTURE SCHEDULE
TOTAL WATTAGE PER FIXTURE	SEE FIXTURE SCHEDULE
TOTAL INTERIOR WATTAGE SPECIFIED VS. ALLOWED	0.8 vs 0.89 W/SF

EXTERIOR LUMENS SHALL HAVE A MINIMUM EFFICIENCY OF 45 LUMENS/WATT.

ADDITIONAL PRESCRIPTIVE COMPLIANCE:

- ☐ 506.2.1 MORE EFFICIENT MECHANICAL EQUIPMENT
- ☑ 506.2.2 REDUCED LIGHTING POWER DENSITY
- ☐ 506.2.3 ENERGY RECOVERY VENTILATION SYSTEMS
- ☐ 506.2.4 HIGHER EFFICIENCY SERVICE WATER HEATING
- ☐ 506.2.5 ON-SITE SUPPLY OF RENEWABLE ENERGY
- ☐ 506.2.6 AUTOMATIC DAYLIGHTING CONTROL SYSTEMS

DESIGNER STATEMENT:

TO THE BEST OF MY KNOWLEDGE AND BELIEF, THE DESIGN OF THIS BUILDING COMPLIES WITH THE ELECTRICAL SYSTEM AND EQUIPMENT REQUIREMENTS OF THE ENERGY CODE.

ODA
overcash demmit
2010 south tryon st. suite 1a
charlotte north carolina 2820
office.704.332.1615
web. www.oda.us.com

SOUTH CAROLINA REGISTERED PROFESSIONAL ENGINEER No. 26307 RYAN E. CATE 4/8/16

Kuester COMMERCIAL

Fort Mill Theater Renovation Phase I

100 Main Street
Fort Mill, SC 29715

FOR CONSTRUCTION
ISSUE DATE: 04/08/16

No.	Description	Date

ELECTRICAL COVER SHEET

E0.11

Copyright 2016 Overcash Demitt Archite
ODA No. 152960

GENERAL NOTES:

A. FOR BATHROOMS, USE 3000K LAMPS, INSTANT START BALLASTS, AND UNIVERSAL SERIES ILLUMINATED LED SWITCH.

B. ALL EXIT/EM LIGHTS SHALL BE CONNECTED TO NEAREST CIRCUIT AHEAD OF SWITCHING.

C. ALL EXTERIOR LIGHTING SHALL BE CONTROLLED BY TIMECLOCK 'ON' AND TIMECLOCK 'OFF'.

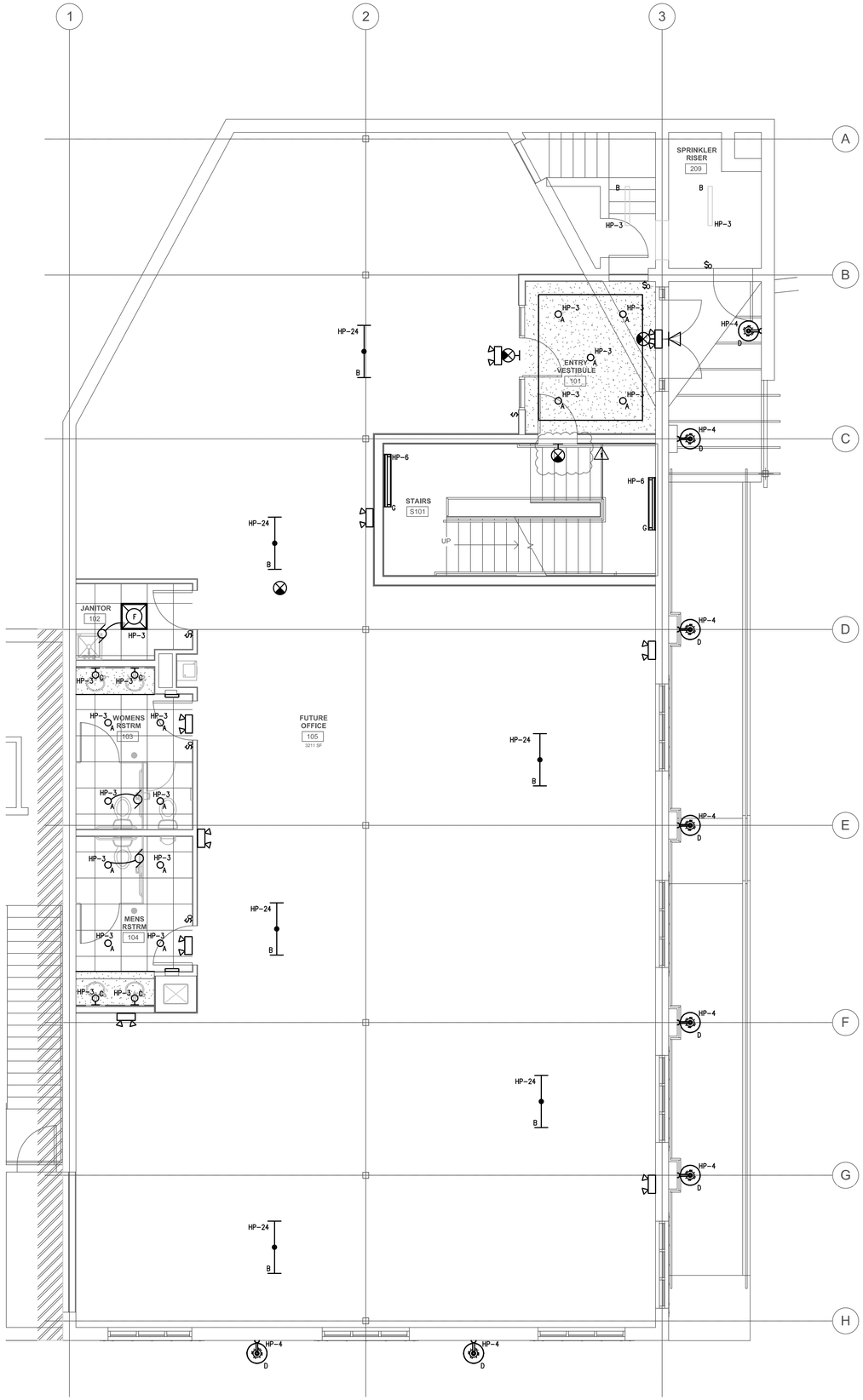

1 E1.11 1ST FLOOR LIGHTING PLAN
1/4"=1'-0"

ODa
overcash demmitt
2010 south tryon st. suite 1a
charlotte north carolina 28203
office.704.332.1615
web. www.oda.us.com

SOUTH CAROLINA REGISTERED PROFESSIONAL ENGINEER No. 26307 RYAN E. CATTA 5/25/16

Kuester COMMERCIAL

Fort Mill Theater Renovation-Phase I

100 Main Street
Fort Mill, SC 29715

FOR CONSTRUCTION
ISSUE DATE: 04/08/16

No.	Description	Date
1	Code Comments	5-25-16

1ST FLOOR LIGHTING PLAN

E1.11

Copyright 2016 Overcash Demitt Architects

ODA No. 152960

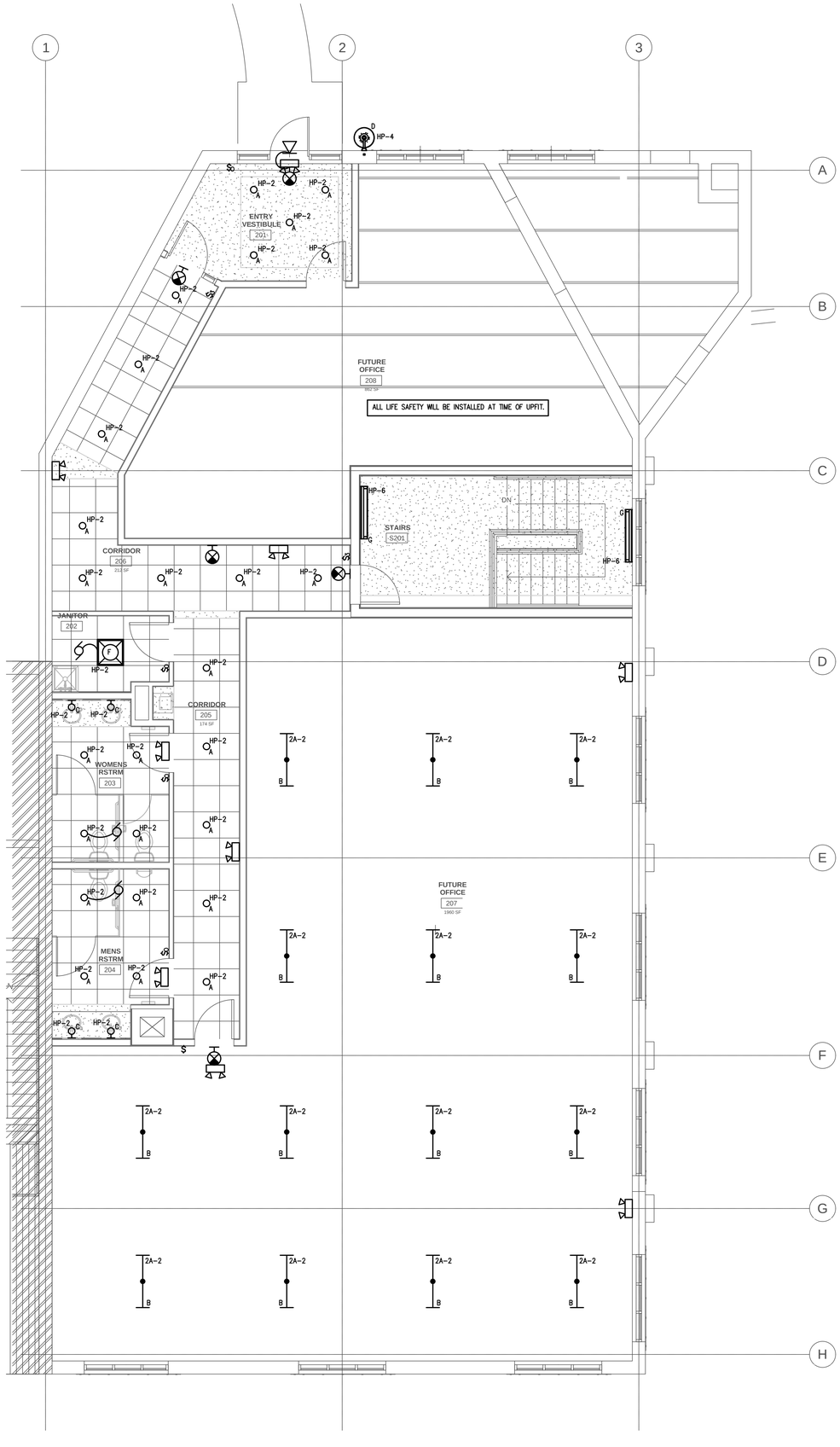

1 E1.12 **2ND FLOOR LIGHTING PLAN**
1/4"=1'-0"

GENERAL NOTES:

A. FOR BATHROOMS, USE 3000K LAMPS, INSTANT START BALLASTS, AND UNIVERSAL SERIES ILLUMINATED LED SWITCH.

B. ALL EXIT/EM LIGHTS SHALL BE CONNECTED TO NEAREST CIRCUIT AHEAD OF SWITCHING.

C. ALL EXTERIOR LIGHTING SHALL BE CONTROLLED BY TIMECLOCK 'ON' AND TIMECLOCK 'OFF'.

ODA
overcash demmit
2010 south tryon st. suite 1a
charlotte north carolina 2820
office.704.332.1615
web. www.oda.us.com

SOUTH CAROLINA REGISTERED PROFESSIONAL ENGINEER No. 26307 RYAN E. CAYK 4/8/16

Kuester COMMERCIAL

Fort Mill Theater Renovation Phase I

100 Main Street
Fort Mill, SC 29715

FOR CONSTRUCTION
ISSUE DATE: 04/08/16

No.	Description	Date

2ND FLOOR LIGHTING PLAN

E1.12

Copyright 2016 Overcash Demitt Archite
ODA No. 152960

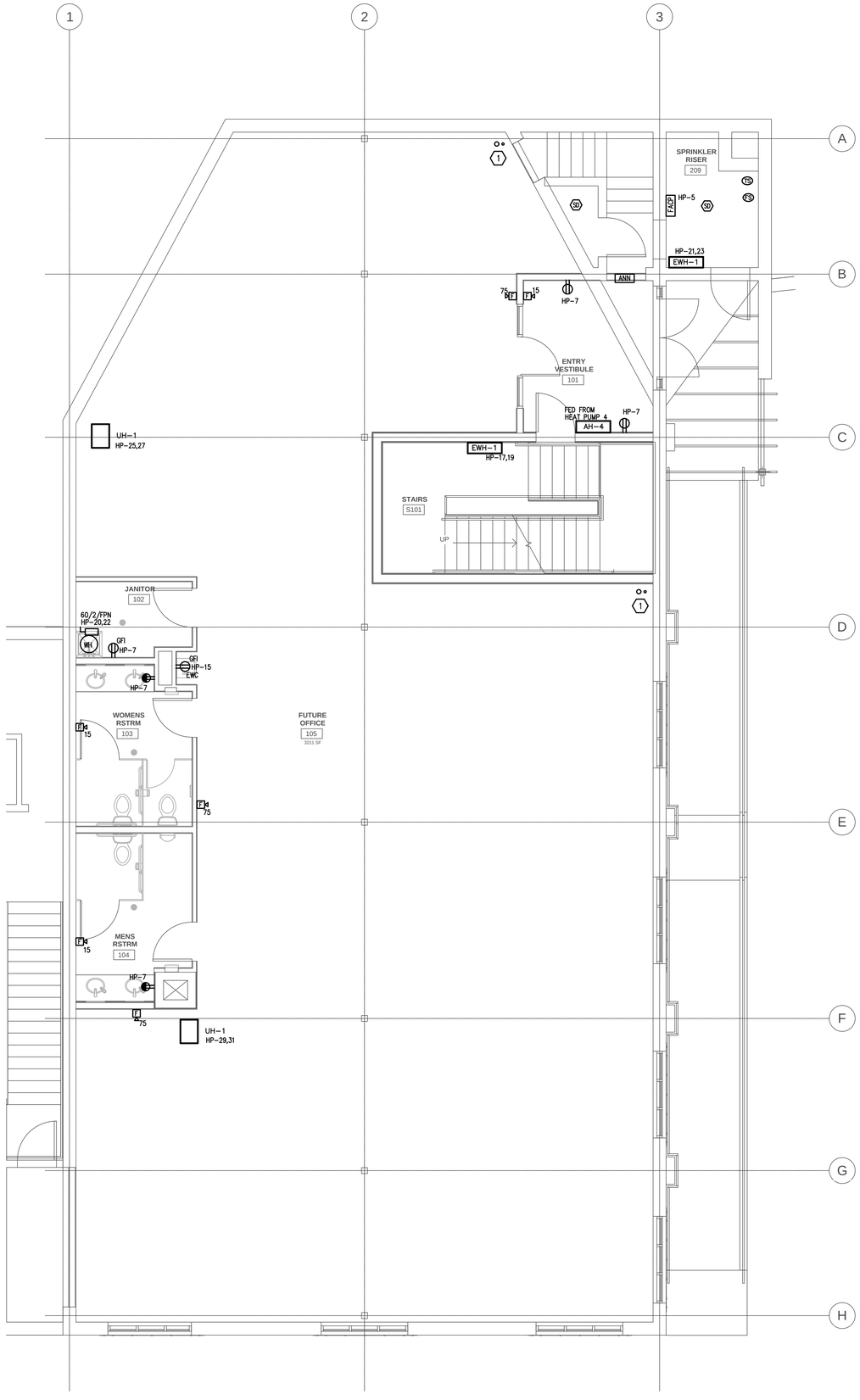

1 E2.11 1ST FLOOR POWER PLAN
1/4"=1'-0"

GENERAL NOTES:

1. MOUNT RECEPTACLES, DATA OUTLETS, & TV OUTLETS AT 18" AFF U.N.O. MOUNT SWITCHES AT 48" AFF.
2. DO NOT MOUNT OUTLET BOXES BACK TO BACK BETWEEN ADJACENT SUITES. EACH BOX SHALL BE SEPARATED BY ATLEAST 6" HORIZONTALLY. DO NOT LOCATE ADJACENT BOXES ON OPPOSITE SIDES OF SAME STUD.
3. PROVIDE BOXES AND RACEWAY WITH PULLSTRING FOR REMOTE THERMOSTATS. COORDINATE BOX AND RACEWAY LOCATIONS AND SIZES WITH MECHANICAL CONTRACTOR.
4. CIRCUIT EXHAUST FANS (EF) TO LIGHTING CIRCUIT IN EACH BATHROOM.

KEYNOTES:

1. EC SHALL STUB (1) 4" EMPTY CONDUITS (WITH PULLSTRING) FOR FUTURE ELECTRICAL SERVICE BACK TO ELECTRICAL TROUGH AND (1) 2" EMPTY CONDUIT (WITH PULLSTRING) FOR FUTURE TELEPHONE BACK TO TEL/CATV CABINET.

ODA
overcash demmit
2010 south tryon st. suite 1a
charlotte north carolina 2820
office.704.332.1615
web. www.oda.us.com

SOUTH CAROLINA REGISTERED PROFESSIONAL ENGINEER No. 26307 RYAN E. CAYK 4/8/16

Kuester COMMERCIAL

Fort Mill Theater Renovation Phase I

100 Main Street
Fort Mill, SC 29715

FOR CONSTRUCTION
ISSUE DATE: 04/08/16

No.	Description	Date

FIRST FLOOR POWER PLAN

E2.11

Copyright 2016 Overcash Demitt Archite
ODA No. 152960

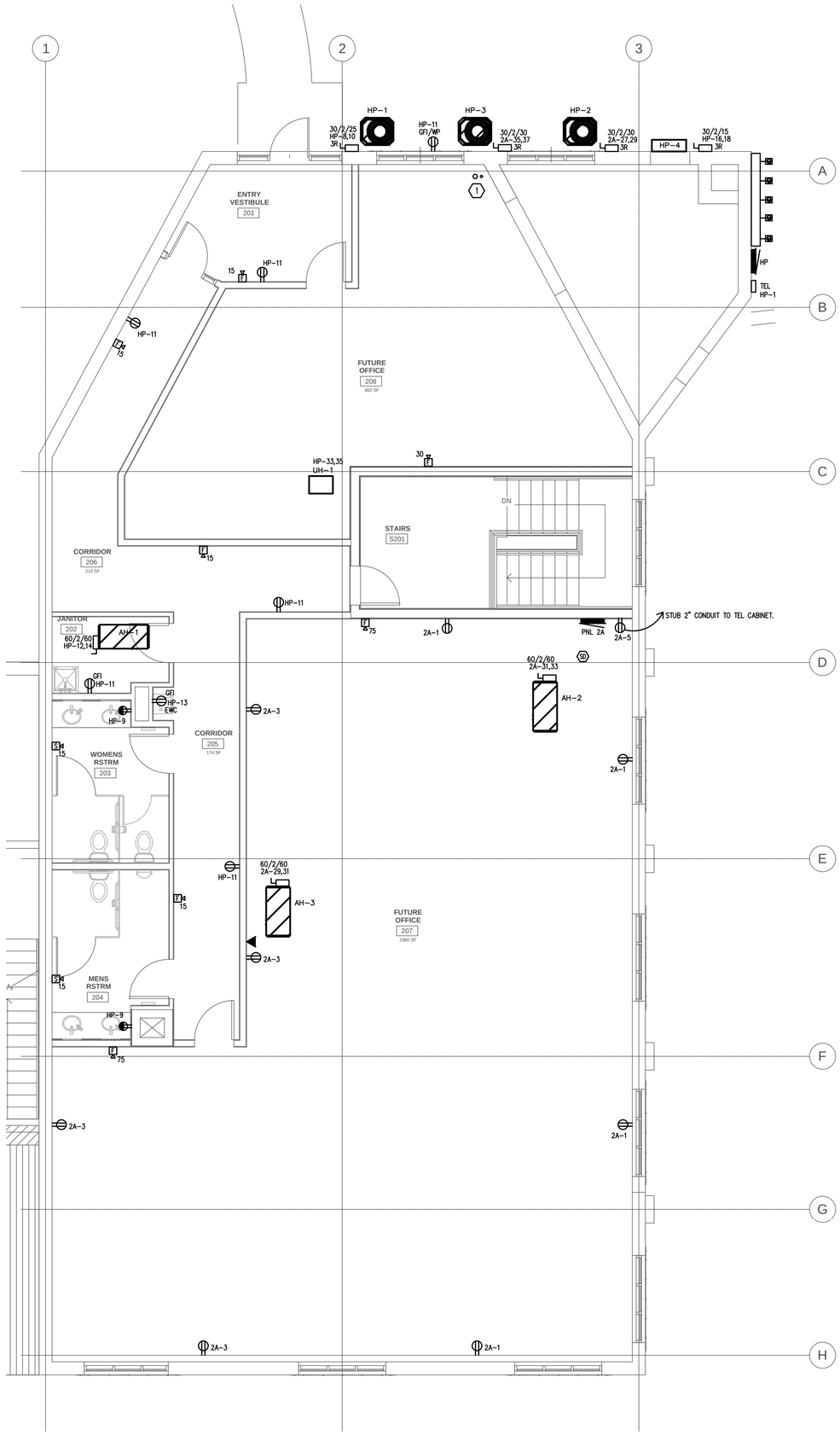

1 E2.12 **2ND FLOOR POWER PLAN**
1/4"=1'-0"

GENERAL NOTES:

1. MOUNT RECEPTACLES, DATA OUTLETS, & TV OUTLETS AT 18" AFF U.N.O. MOUNT SWITCHES AT 48" AFF.
2. DO NOT MOUNT OUTLET BOXES BACK TO BACK BETWEEN ADJACENT SUITES. EACH BOX SHALL BE SEPARATED BY ATLEAST 6" HORIZONTALLY. DO NOT LOCATE ADJACENT BOXES ON OPPOSITE SIDES OF SAME STUD.
3. PROVIDE BOXES AND RACEWAY WITH PULLSTRING FOR REMOTE THERMOSTATS. COORDINATE BOX AND RACEWAY LOCATIONS AND SIZES WITH MECHANICAL CONTRACTOR.
4. CIRCUIT EXHAUST FANS (EF) TO LIGHTING CIRCUIT IN EACH BATHROOM.

KEYNOTES:

1. EC SHALL STUB (1) 4" EMPTY CONDUITS (WITH PULLSTRING) FOR FUTURE ELECTRICAL SERVICE BACK TO ELECTRICAL TROUGH AND (1) 2" EMPTY CONDUIT (WITH PULLSTRING) FOR FUTURE TELEPHONE BACK TO TEL/CATV CABINET.

ODA
overcash demmit
2010 south tryon st. suite 1a
charlotte north carolina 2820
office.704.332.1615
web. www.oda.us.com

NORTH CAROLINA REGISTERED PROFESSIONAL ENGINEER No. 26307 RYAN E. CAYK 4/8/16

Kuester COMMERCIAL

Fort Mill Theater Renovation Phase I

100 Main Street
Fort Mill, SC 29715

FOR CONSTRUCTION
ISSUE DATE: 04/08/16

No.	Description	Date

SECOND FLOOR POWER PLAN

E2.12

Copyright 2016 Overcash Demitt Archite
ODA No. 152960

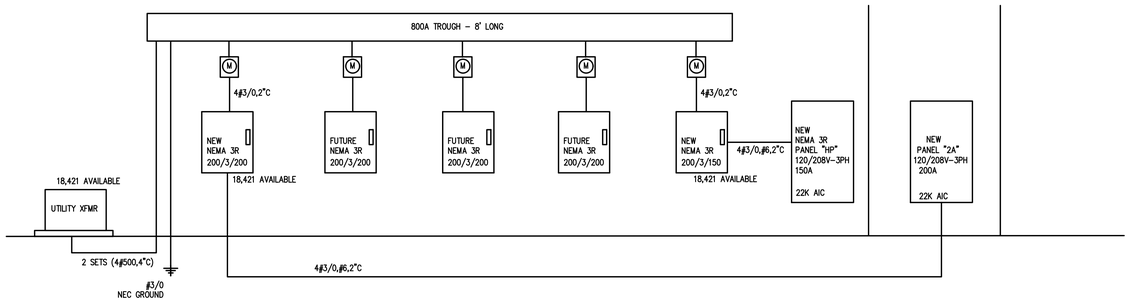

1 E3.00 RISER DIAGRAM
N.T.S

*EC SHALL COORDINATE EXACT LOCATION OF UTILITY TRANSFORMER WITH POWER COMPANY.

NEW PANELBOARD SCHEDULE — HP

VOLTAGE	PHASE	WIRE	MCB (A)	MLO (A)	AIC	MOUNTING	MANUFAC.	MDL #	DWG REF
120 / 208	3	4	0	150	22K	SURF	-	-	-

TYPE LEGEND				REMARKS
L	LIGHTING	K	KITCHEN EQ	PROVIDE EQUIPMENT GROUND BUS
R	RECEPTACLES	E	EQUIPMENT	PROVIDE FEED THRU AND/OR SUB FEED LUGS FOR MULTI-SECTION PANEL
M	MECHANICAL	O	OTHER	-

CKT. #	ITEM SERVED	TYPE	WIRE	CONDUIT	CKT. BRK TRIP	P	LOAD (VA)	PHASE	LOAD (VA)	P	CKT. BRK TRIP	CONDUIT	WIRE	TYPE	ITEM SERVED	CKT. #
1	Tel cabinet	R	#12	3/4"	20A	1	500	A	500	1	20A	3/4"	#12	L	Interior lights	2
3	Interior Lights	R	#12	3/4"	20A	1	500	B	500	1	20A	3/4"	#12	L	Exterior lights	4
5	FACP-Locked on	R	#12	3/4"	20A	1	500	C	500	1	20A	3/4"	#12	L	Stair Lighting	6
7	Receptacles	R	#12	3/4"	20A	1	500	A	1500	2	25A	3/4"	#10	M	HP-1	8
9	Receptacles	R	#12	3/4"	20A	1	540	B	1500						-	10
11	Receptacles	R	#12	3/4"	20A	1	720	C	3600	2	60A	3/4"	#6	M	AH-1	12
13	EWC	R	#12	3/4"	20A	1	1000	A	3600						-	14
15	EWC	R	#12	3/4"	20A	1	1000	B	1000	2	15A	3/4"	#12	M	HP-4	16
17	EWH-1	M	#12	3/4"	20A	2	1500	C	1000						-	18
19	-		-	-			1500	A	3000	2	40A	3/4"	#8	M	WH	20
21	EWH-1	M	#12	3/4"	20A	2	1500	B	3000						-	22
23	-						1500	C		1	20A					24
25	UH-1	M	#12	3/4"	20A	2	1500	A		1	20A					26
27	-						1500	B		1	20A					28
29	UH-1	M	#12	3/4"	20A	2	1500	C		1						30
31	-						1500	A		1						32
33	UH-1	M	#12	3/4"	20A	2	1500	B		1						34
35	-						1500	C		1						36
37						1		A		1						38
39						1		B		1						40
41						1		C		1						42

	A	B	C	TOTAL
CONNECTED LOAD (VA)	15100	12540	12320	39960

TYPE	LOAD (VA)	SUBLOADS (VA)		CONN LD(VA)	SIZING FACTOR	SIZING LOAD (VA)	
LIGHTING	1500	-	-	1500	125%	1875	
RECEPTACLES	5260	-	-	5260	*	5260	
MECHANICAL	33200	-	-	33200	100%	33200	
KITCHEN EQ	0	-	-	0	100%	0	**
# OF KITCH EQ	0	-	-	0			
EQUIPMENT	0	-	-	0	100%	0	
OTHER	0	-	-	0	100%	0	
CONNECTED TOTAL (VA)				39960		40335	SIZING TOTAL (VA)
CONNECTED AMPACITY (A)				110.92		111.96	SIZING AMPACITY (A)
DEMAND TOTAL (VA)				39960			
DEMAND AMPACITY (A)				110.92			

NOTES
* 1ST 10KVA @ 100%, REMAINING @ 50%
** SIZE FAC. IN ACCORDANCE WITH NEC 220.56

NEW PANELBOARD SCHEDULE — 2A

VOLTAGE	PHASE	WIRE	MCB (A)	MLO (A)	AIC	MOUNTING	MANUFAC.	MDL #	DWG REF
120 / 208	3	4	0	200	22K	-	-	-	-

TYPE LEGEND				REMARKS
L	LIGHTING	K	KITCHEN EQ	PROVIDE EQUIPMENT GROUND BUS
R	RECEPTACLES	E	EQUIPMENT	PROVIDE FEED THRU AND/OR SUB FEED LUGS FOR MULTI-SECTION PANEL
M	MECHANICAL	O	OTHER	-

CKT. #	ITEM SERVED	TYPE	WIRE	CONDUIT	CKT. BRK TRIP	P	LOAD (VA)	PHASE	LOAD (VA)	P	CKT. BRK TRIP	CONDUIT	WIRE	TYPE	ITEM SERVED	CKT. #
1	Receptacles	R	#12	3/4"	20A	1	750	A	700	1	20A	3/4"	#12	L	Lighting	2
3	Receptacles	R	#12	3/4"	20A	1	750	B		1	20A					4
5	Tel board	R	#12	3/4"	20A	1	500	C		1	20A					6
7					20A	1		A		1	20A					8
9					20A	1		B		1	20A					10
11					20A	1		C		1	20A					12
13						1		A		1						14
15						1		B		1						16
17						1		C		1						18
19						1		A		1						20
21						1		B		1						22
23						1		C		1						24
25						1		A		1						26
27	HP-2	M	#10	3/4"	30A	2	1800	B		1						28
29	-						1800	C		1						30
31	AH-2	M	#6	3/4"	60A	2	3600	A		1						32
33	-						3600	B		1						34
35	HP-3	M	#10	3/4"	30A	2	1800	C		1						36
37	-						1800	A		1						38
39	AH-3	M	#6	3/4"	60A	2	3600	B		1						40
41	-						3600	C		1						42

	A	B	C	TOTAL
CONNECTED LOAD (VA)	6850	9750	7700	24300

TYPE	LOAD (VA)	SUBLOADS (VA)		CONN LD(VA)	SIZING FACTOR	SIZING LOAD (VA)	
LIGHTING	700	-	-	700	125%	875	
RECEPTACLES	2000	-	-	2000	*	2000	
MECHANICAL	21600	-	-	21600	100%	21600	
KITCHEN EQ	0	-	-	0	100%	0	**
# OF KITCH EQ	0	-	-	0			
EQUIPMENT	0	-	-	0	100%	0	
OTHER	0	-	-	0	100%	0	
CONNECTED TOTAL (VA)				24300		24475	SIZING TOTAL (VA)
CONNECTED AMPACITY (A)				67.45		67.94	SIZING AMPACITY (A)
DEMAND TOTAL (VA)				24300			
DEMAND AMPACITY (A)				67.45			

NOTES
* 1ST 10KVA @ 100%, REMAINING @ 50%
** SIZE FAC. IN ACCORDANCE WITH NEC 220.56

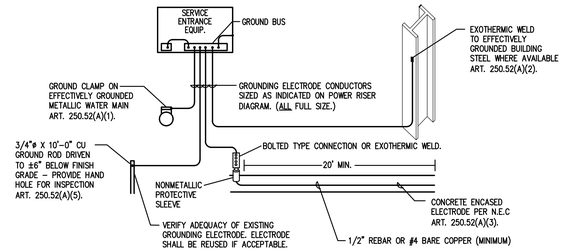

2 E3.00 SERVICE GROUNDING DETAIL
N.T.S

GROUNDING ELECTRODES SHALL BE PROVIDED IN ACCORDANCE WITH NEC 250-C.

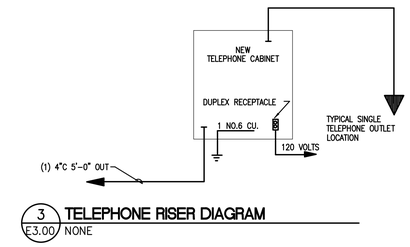

3 E3.00 TELEPHONE RISER DIAGRAM
NONE

NOTE:
EC SHALL COORDINATE WITH LOCAL TELEPHONE COMPANY TO BRING NEW TELEPHONE SERVICE TO SITE.

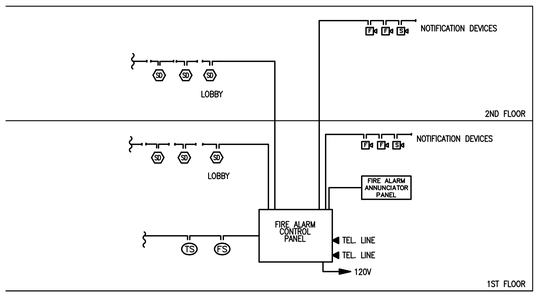

6 E3.00 FIRE ALARM RISER DIAGRAM
NO SCALE

GENERAL NOTES

1. FIRE ALARM SYSTEM SHALL BE ADDRESSABLE, 24V DC, POWER LIMITED, FULLY SUPERVISED, WITH 24 HOUR STANDBY BATTERY. PANEL TO BE SURFACE MOUNTED. SYSTEM SHALL HAVE MINIMUM 25% SPARE CAPACITY.
2. FIRE ALARM DEVICES ARE TO BE INSTALLED IN ACCORDANCE WITH NFPA 72 AND 'ADA'.
3. ALL FIRE ALARM WIRING SHALL BE PLENUM RATED WHERE REQUIRED.
4. ELECTRICAL CONTRACTOR SHALL PROVIDE A FIRE ALARM LAYOUT PLAN AT THE FACP AND THE ANNUNCIATOR PANEL IN THE LOBBY.
5. ELECTRICAL CONTRACTOR TO PROVIDE AUTHORITY HAVING JURISDICTION WITH FIRE ALARM SYSTEM INSTALLATION PLANS FOR FINAL APPROVAL, PRIOR TO INSTALLATION.
6. PERFORM BATTERY CALCULATIONS AND SUBMIT CALCULATIONS.
7. ALL STROBES SHALL BE SYNCHRONIZED.
8. AS PER 2006 NCBC 907.9.1.3 THE FIRE ALARM SYSTEM SHALL HAVE THE CAPABILITY TO BE ACTIVATED BY MANUAL ALARM PULL, THE MAIN FIRE ALARM PANEL, OR BY ANY SMOKE DETECTOR WITHIN A SLEEPING AREA.
9. NOTIFICATION APPLIANCE CIRCUIT TO PROVIDE SYNCHRONIZATION OF STROBES AT A RATE OF 1Hz AND OPERATES HORNS WITH A PULSE 3 TEMPORAL CODE PATTERN. THE CAPABILITY TO SYNCHRONIZE MULTIPLE NOTIFICATION APPLIANCE CIRCUITS SHALL BE PROVIDED.

FIRE ALARM SYSTEM SCHEDULE	
DEVICE TYPE AND LOCATION	ACTION
1ST–2ND FLOOR SMOKE DETECTORS	1
DUCT SMOKE DETECTORS	1,2
TROUBLE SIGNAL FROM ANY DEVICE	3

ACTION NOTES

1. ALARM INPUTS FROM MANUAL PULL STATIONS, SMOKE DETECTORS, OR DUCT DETECTORS SHALL ACTIVATE AUDIBLE/VISUAL SIGNALS IN THE BUILDING, AND CAUSE APPROPRIATE RESPONSE OF CONTROLLED FUNCTIONS(DOOR HOLDERS/FIRE DOORS, ETC.). FACP SHALL USE DIGITAL DIALER TO REPORT TO U.L. LISTED CENTRAL MONITORING STATION. MONITORING STATION REQUIREMENTS SHALL BE COORDINATED WITH OWNER AS REQUIRED.
2. ALARM INPUT SHALL CAUSE COMMON AREA AIR HANDLERS TO SHUT DOWN.
3. BUZZER SHALL SOUND AT FACP ONLY AND CENTRAL MONITORING STATION SHALL BE ALERTED TO TROUBLE.

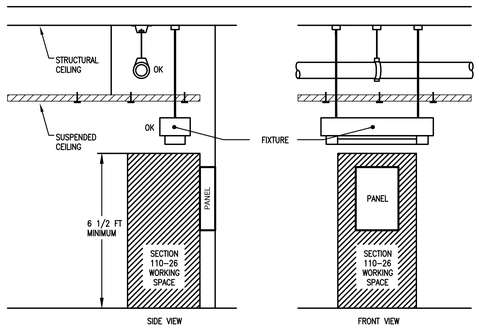

4 E3.00 WORKING CLEARANCE FOR ELECTRICAL EQUIPMENT
N.E.C. ARTICLE 110-26

INSTALL PHOTOCELL ON ROOF FACING NORTH.

1. 30A, MULTI-POLE, ELECTRICALLY HELD WITH 120V COIL, 600V LINE CONTACTS AND NEMA 1 ENCLOSURE.
2. PHOTOELECTRIC SWITCH SHALL BE 20A, 120V, SPST. MOUNT OUTDOORS AND SHIELD FROM ARTIFICIAL LIGHT SOURCES.
3. LOCATE OVER-RIDE SWITCH IN THE ELECTRICAL ROOM NEXT TO LIGHTING CONTACTOR. COORDINATE EXACT LOCATION WITH OWNER.
4. THE POOL WATER AND POOL DECK LIGHTS TO BE SWITCHED BY TIME CLOCK

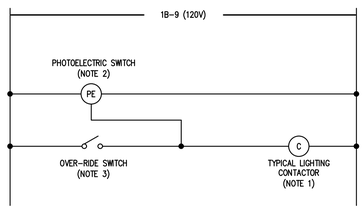

5 E3.00 EXTERIOR LIGHTING CONTROL
NTS

ODA
overcash demmitt
2010 south tryon st. suite 1a
charlotte north carolina 2820
office.704.332.1615
web. www.oda.us.com

NORTH CAROLINA REGISTERED PROFESSIONAL ENGINEER No. 26307 BRIAN E. CAYK 4/8/16

Kuester COMMERCIAL

Fort Mill Theater Renovation Phase I

100 Main Street
Fort Mill, SC 29715

FOR CONSTRUCTION
ISSUE DATE: 04/08/16

No.	Description	Date

ELETRICAL DETAILS

E3.00

Copyright 2016 Overcash Demitt Archite

ODA No. 152960

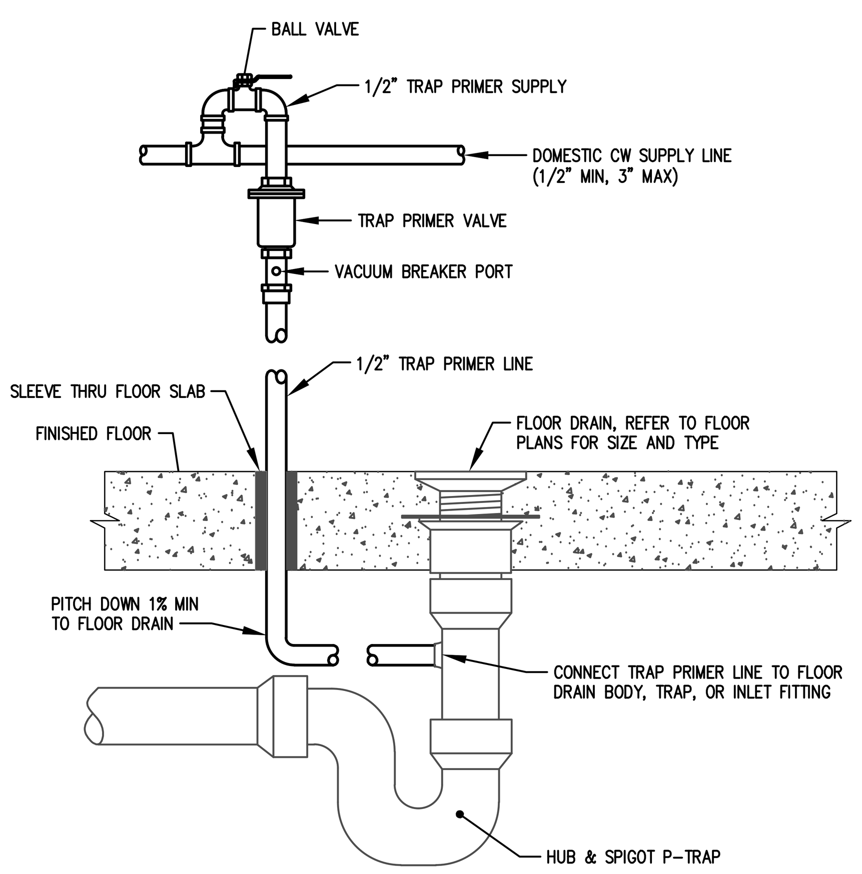

1 TRAP PRIMER DETAIL
P0.11 NOT TO SCALE

TRAP PRIMER NOTES:
1. PROVIDE TRAP PRIMER VALVES FOR ALL FLOOR DRAINS.
2. TRAP PRIMER VALVES SHALL BE SIOUX CHIEF PRIME PERFECT SERIES 695.
3. CONNECT TRAP PRIMER VALVE TO CW LINE: 1/2" MIN. – 3" MAX.
4. PROVIDE SIOUX CHIEF WYE SPLITTER AND/OR DISTRIBUTOR FOR TRAP PRIMER VALVES SERVING MORE THAN ONE FLOOR DRAIN.
5. MAXIMUM OF EIGHT FLOOR DRAINS MAY BE SERVED BY ONE TRAP PRIMER VALVE.

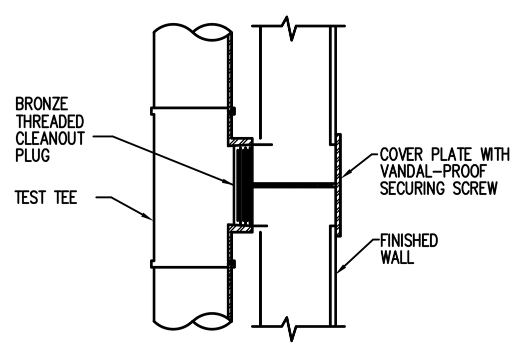

2 WALL CLEAN OUT DETAIL
P0.11 NOT TO SCALE

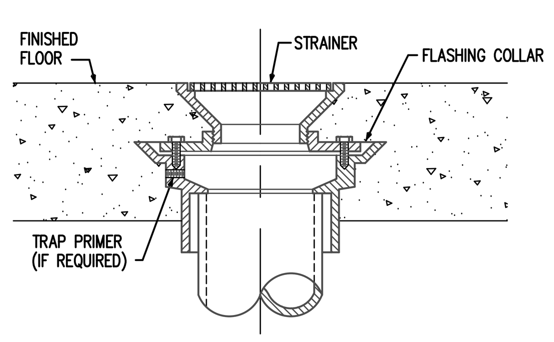

NOTE: PROVIDE FLOOR DRAIN WITH TRAP PRIMER CONNECTION OR PROVIDE TRAP PRIMER CONNECTION ON P-TRAP.

3 FLOOR DRAIN DETAIL
P0.11 NOT TO SCALE

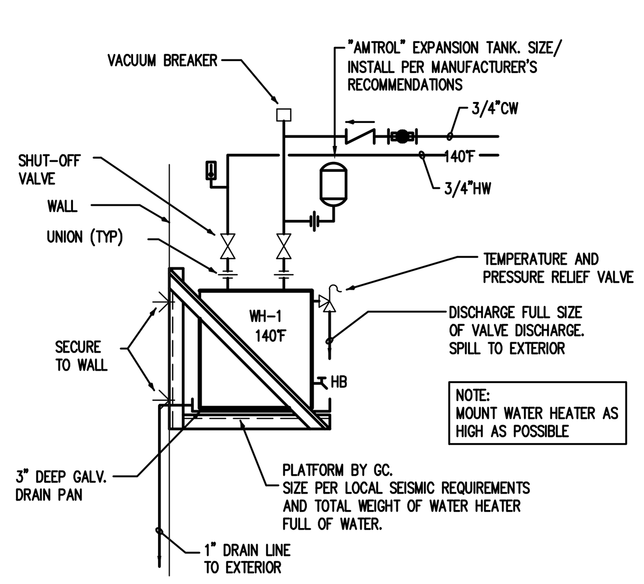

4 WATER HEATER DIAGRAM
P0.11 NOT TO SCALE

NOTES:
1. INSTALL WATER HEATER PER MANUFACTURER REQUIREMENTS.
2. PROVIDE HEAT TRAP ON CW AND HW LINES PER ENERGY CODE.
3. HAND SINKS & LAVS SHALL BE PROVIDED WITH "SYMMONS" POINT-OF-USE MIXING VALVE FACTORY PRESET @ 110°F

PLUMBING GENERAL NOTES

GENERAL REQUIREMENTS:

1. GENERAL AND SPECIAL CONDITIONS: GENERAL AND SPECIAL CONDITIONS ARE HEREBY MADE AN INTEGRAL PART OF THIS DIVISION OF THE SPECIFICATIONS INSOFAR AS SAME ARE APPLICABLE TO THE WORK UNDER THIS DIVISION AND UNLESS OTHERWISE SPECIFIED.

2. SCOPE: PROVIDE ALL LABOR, MATERIALS, AND EQUIPMENT REQUIRED FOR THE COMPLETION AND OPERATION OF ALL SYSTEMS IN THIS SECTION OF WORK.

3. CODE COMPLIANCE: ALL WORK SHALL COMPLY WITH THE REQUIREMENTS OF ALL AUTHORITIES HAVING JURISDICTION, BUILDING DEPARTMENTS, AND DEPARTMENT OF HEALTH. APPLICABLE NATIONAL, STATE, AND LOCAL CODES, LAWS, AND REGULATIONS GOVERNING OR RELATING TO ANY PORTION OF THIS WORK SHALL BE INCORPORATED INTO AND MADE A PART OF THESE CONTRACT DOCUMENTS AND SPECIFICATIONS. THE CONTRACTOR IS TO NOTIFY THE ARCHITECT/ENGINEER OF ANY WORK OR MATERIALS WHICH VIOLATE ANY OF THE ABOVE CODES, LAWS, OR REGULATIONS. ANY WORK DONE BY THE CONTRACTOR CAUSING SUCH A VIOLATION SHALL BE CORRECTED AT THE CONTRACTOR'S EXPENSE AND AT NO EXPENSE TO THE OWNER.

4. PERMITS: APPLY FOR AND PAY FOR ALL NECESSARY PERMITS, FEES, AND INSPECTIONS REQUIRED BY ANY PUBLIC AUTHORITY HAVING JURISDICTION.

5. WARRANTY: PROVIDE ALL MATERIALS AND EQUIPMENT UNDER THIS SECTION OF THE SPECIFICATIONS WITH A ONE YEAR WARRANTY FROM THE DATE OF ACCEPTANCE OF WORK BY THE OWNER.

6. COORDINATION: VERIFY ALL ROUGH-IN LOCATIONS AND COORDINATE PIPING AND EQUIPMENT LOCATIONS WITH WORK UNDER OTHER DIVISIONS OF THE SPECIFICATIONS TO AVOID CONFLICTS. CONTRACTOR MUST COORDINATE WITH OTHER TRADES FOR ALL STRUCTURES, PIPING, CONDUIT, DUCTWORK, LIGHTING, ETC TO PROPERLY BE INSTALLED. ANY CONFLICTS SHALL BE RESOLVED AT NO EXPENSE TO THE OWNER. COORDINATE INSTALLATION OF ALL PLUMBING PIPING AT CMU WALLS SO THAT THE PIPING IS PLACED IN WALL DURING CMU WALL CONSTRUCTION. CUTTING AND PATCHING OF CMU WALLS IN PLACE WILL NOT BE PERMITTED.

7. FIELD VERIFICATION: FIELD VERIFY EXISTING CONDITIONS BEFORE STARTING CONSTRUCTION AND NOTIFY THE ARCHITECT/ENGINEER OF RECORD OF ANY DISCREPANCIES BETWEEN THE CONSTRUCTION DOCUMENTS AND EXISTING CONDITIONS, AND/OR ANY POTENTIAL PROBLEMS OBSERVED, BEFORE CONTINUING WORK IN THE AFFECTED AREAS.

8. PLUMBING SYSTEMS INCLUDE, BUT ARE NOT LIMITED TO:
-PLUMBING FIXTURES AND EQUIPMENT
-FIRE STOPPING
-DOMESTIC WATER SYSTEM
-SANITARY WASTE AND VENT SYSTEM

FIXTURES:

1. PROVIDE COMPLETE FIXTURES AND INCLUDE SUPPLIES, STOPS, VALVES, FAUCETS, DRAINS, TRAPS, TAILPIECES, ESCUTCHEONS, ETC. EXPOSED COPPER OR BRASS MATERIALS SHALL BE CHROME PLATED.

2. PROVIDE PERMANENTLY ATTACHED VACUUM BREAKERS FOR ALL FIXTURES TO WHICH HOSES MAY BE CONNECTED.

3. REFER TO ARCHITECTURAL DRAWINGS FOR MOUNTING HEIGHTS OF PLUMBING FIXTURES.

FIRE STOPPING:

1. FIRE STOP ALL PENETRATIONS, BY PIPING OR CONDUITS, OF FIRE RATED WALLS, FLOORS, AND PARTITIONS. PROVIDE DEVICE(S) OR SYSTEM(S) WHICH HAS BEEN TESTED AND LISTED AS COMPLYING WITH ASTM E-814 AND INSTALL IN ACCORDANCE WITH THE CONDITIONS OF THEIR LISTING. PROVIDE DEVICE(S) OR SYSTEM(S) WITH AN 'F' RATING EQUAL TO THE RATING OF THE ASSEMBLY BEING PENETRATED.

DOMESTIC WATER PIPING:

1. FURNISH AND INSTALL A COMPLETE SYSTEM OF DOMESTIC HOT AND COLD WATER FROM EXISTING SUPPLIES TO ALL FIXTURES AND/OR EQUIPMENT REQUIRING DOMESTIC WATER SUPPLIES. VERIFY LOCATION OF BEGINNING POINTS.

2. DOMESTIC WATER PIPING: ASTM B 88 TYPE 'L' HARD COPPER TUBE WITH WROT COPPER FITTINGS, AND SOLDERED OR PRESSURE-SEALED JOINTS.

3. STERILIZE DOMESTIC WATER PIPING IN ACCORDANCE WITH THE AMERICAN WATER WORKS ASSOCIATION'S SPECIFICATIONS AND LOCAL HEALTH DEPARTMENT REGULATIONS.

4. INSULATE DOMESTIC WATER PIPING ABOVE GRADE (EXCEPT EXPOSED CONNECTIONS TO PLUMBING FIXTURES) WITH ENGINEERED POLYMER FOAM INSULATION, OR FIBERGLASS WITH FITTING INSERTS AND PVC COVERS. FOLLOW THIS SCHEDULE:

SERVICE	PIPE SIZE	INS. THICKNESS
DOMESTIC HOT WATER	ALL	1/2"
DOMESTIC HOT WATER CIRCULATION	ALL	1/2"
DOMESTIC COLD WATER	ALL	1/2"

5. DOMESTIC WATER PIPING INSULATION, JACKETS, COVERINGS, SEALERS, MASTICS, AND ADHESIVES SHALL NOT EXCEED A FLAME SPREAD RATING OF 25 AND A SMOKE DEVELOPED RATING OF 50 WHEN TESTED IN ACCORDANCE WITH ASTM E 84.

6. ALL PIPE INSULATION SHALL RUN CONTINUOUSLY THROUGH FLOORS, WALLS, AND PARTITIONS.

7. SHUT-OFF VALVES SHALL BE FULL PORT, BALL TYPE. PROVIDE SHUT-OFF VALVES ON ALL BRANCH PIPING SERVING TWO OR MORE FIXTURES, AND WHERE INDICATED ON THE DRAWINGS. INSTALL VALVES IN A LOCATION THAT PERMITS ACCESS FOR SERVICE AND OPERATION WITHOUT DAMAGE TO THE BUILDING OR FINISHED MATERIALS. PROVIDE ACCESS DOORS IF REQUIRED.

8. PROVIDE DRAIN VALVES IN THE DOMESTIC HOT AND COLD WATER PIPING AT ALL LOW POINTS TO ALLOW FOR COMPLETE DRAINAGE OF THE SYSTEMS.

9. PROTECT COPPER PIPING AGAINST CONTACT WITH DISSIMILAR METALS. ALL HANGERS, SUPPORTS, ANCHORS, AND CLIPS SHALL BE COPPER OR COPPER-PLATED. WHERE COPPER PIPING IS CARRIED ON IRON TRAPEZE HANGERS WITH OTHER PIPING, PROVIDE A PERMANENT ELECTROLYTIC ISOLATION MATERIAL TO PREVENT CONTACT WITH OTHER METALS.

10. PROTECT COPPER PIPING AGAINST CONTACT WITH ALL MASONRY. WHERE COPPER PIPING IS SLEEVED THROUGH MASONRY, PROVIDE COPPER OR RED BRASS SLEEVES. WHERE COPPER PIPING IS CONCEALED IN OR AGAINST MASONRY PARTITIONS, PROVIDE A HEAVY COATING OF ASPHALTIC ENAMEL ON THE COPPER PIPING AND 15# ASPHALT-SATURATED FELT BETWEEN THE PIPING AND THE MASONRY PARTITION.

PLUMBING ABBREVIATIONS

AFF	ABOVE FINISHED FLOOR
AHAP	AS HIGH AS POSSIBLE
BLDG	BUILDING
BLW	BELOW
CLG	CEILING
CONN	CONNECT OR CONNECTION
CONT	CONTINUATION
DN	DOWN
E.C.	ELECTRICAL CONTRACTOR
ETR	EXISTING TO REMAIN
EX, EXIST, (E)	EXISTING
FFE	FINISHED FLOOR ELEVATION
FLR	FLOOR
G.C.	GENERAL CONTRACTOR
HD	HUB DRAIN
GW	GREASE WASTE
M.C.	MECHANICAL CONTRACTOR
MTD	MOUNTED
P.C.	PLUMBING CONTRACTOR
SF, SQ FT	SQUARE FOOT
T&P	TEMPERATURE AND PRESSURE
TP	TRAP PRIMER
TYP	TYPICAL
VTR	VENT THROUGH ROOF
W	WASTE

PLUMBING LEGEND

——— - ———	DOMESTIC COLD WATER PIPING (CW)
——— - - ———	DOMESTIC HOT WATER PIPING (110°)
———140°———	DOMESTIC HOT WATER PIPING (140°)
———ST———	STORM PIPING
———SAN———	SANITARY PIPING (SAN)
- - - - - - - -	VENT PIPING (V)
- - - - - - - -	FILTERED WATER PIPING
———02———	OXYGEN PIPING
	BALL VALVE
	PRESSURE REDUCING VALVE
	CHECK VALVE
OR	FLOOR CLEAN OUT (FCO)
	FLOOR DRAIN (FD)
	FLOOR SINK
	GRADE CLEAN OUT (GCO)
OR	PIPE DOWN
OR	PIPE DOWN
	WALL CLEAN OUT (WCO)

PLUMBING GENERAL NOTES CONT.

SANITARY SOIL, WASTE, AND VENT PIPING:

1. FURNISH AND INSTALL COMPLETE SYSTEMS OF SOIL, WASTE, AND VENT PIPING FROM ALL PLUMBING FIXTURES AND/OR EQUIPMENT REQUIRING WASTE AND VENT CONNECTIONS. ALL SOIL, WASTE, AND VENT PIPING SHALL BE CONCEALED IN THE BUILDING CONSTRUCTION WHERE POSSIBLE.

2. SOIL, WASTE, AND VENT PIPING: CISPI 301, HUBLESS, CAST IRON SOIL PIPIE AND FITTINGS; AND SHIELDED, STAINLESS STEEL COUPLINGS.

3. INVERT ELEVATIONS SHALL BE ESTABLISHED AND VERIFIED BEFORE SANITARY PIPING IS INSTALLED IN ORDER THAT PROPER SLOPES WILL BE MAINTAINED. SLOPE SANITARY PIPING 2-1/2" AND SMALLER AT 1/4" PER FOOT MINIMUM, AND SLOPE SANITARY PIPING 3" AND LARGER AT 1/8" PER FOOT MINIMUM.

4. WHERE SANITARY PIPING IS EXPOSED IN TOILET ROOMS, PROVIDE CHROME-PLATED BRASS PIPING WITH MATCHING STOPS AND ESCUTCHEONS. PROVIDE REMOVABLE TRAPS WITH INTEGRAL CLEANOUT PLUG FOR ALL LAVATORIES.

5. INSTALL CLEANOUTS IN A LOCATION THAT PERMITS ACCESS FOR SERVICE WITHOUT DAMAGE TO THE BUILDING OR FINISHED MATERIALS. CLEANOUT PLUGS SHALL BE INSTALLED IN ACCORDANCE WITH PLUMBING CODE REQUIREMENTS. PROVIDE CLEANOUTS IN HORIZONTAL PIPING NOT MORE THAN 100 FEET APART, AT THE BASE OF ALL SOIL AND WASTE STACKS, AND FOR EVERY FOUR 45° CHANGES LOCATED IN SERIES (A LONG SWEEP IS EQUIVALENT TO TWO 45° BENDS).

WATER HAMMER ARRESTER REQUIREMENTS:

1. PROVIDE WATER HAMMER ARRESTERS CONFORMING TO PDI-WH201 OR ASSE 1010, INSTALLED PER MANUFACTURER'S SPECIFICATIONS, WHERE QUICK CLOSING VALVES ARE UTILIZED. A QUICK CLOSING VALVE IS A VALVE OR FAUCET THAT CLOSES AUTOMATICALLY WHEN RELEASED, OR THAT IS CONTROLLED BY MECHANICAL MEANS FOR FAST-ACTION CLOSING. REFER TO WATER HAMMER ARRESTER SCHEDULE.

2. AS A MINIMUM, PROVIDE ONE WATER HAMMER ARRESTER FOR EACH BRANCH LINE TO EACH TOILET ROOM.

SEISMIC REQUIREMENTS:

1. PROPERLY SUPPORT AND BRACE VERTICALLY AND HORIZONTALLY ALL PIPING, APPARATUS, EQUIPMENT, ETC IN ACCORDANCE WITH APPLICABLE CODES TO PREVENT EXCESSIVE MOVEMENT DURING SEISMIC CONDITIONS.

PLUMBING FIXTURE SPECIFICATIONS AND CONNECTION SCHEDULE

MARK	FIXTURE	TYPE	MATERIAL	PIPE SIZES				SPECIFICATION	REMARKS
				SAN	VENT	CW	HW		
HWC	ADA WATER CLOSET	FLOOR MOUNTED FLUSH TANK	VITREOUS CHINA	3"	2"	½"	–	FLOOR MOUNTED VITREOUS CHINA FLUSH TANK TYPE ELONGATED BOWL, SHALL BE EQUAL TO AMERICAN STANDARD CADET PRESSURE ASSISTED TOILET MODEL 2467.100, WITH AMERICAN STANDARD 5324.019 OPEN FRONT SEAT.	
WC	WATER CLOSET	FLOOR MOUNTED FLUSH TANK	VITREOUS CHINA	3"	2"	½"	–	FLOOR MOUNTED VITREOUS CHINA FLUSH TANK TYPE ELONGATED BOWL, SHALL BE EQUAL TO AMERICAN STANDARD CADET PRESSURE ASSISTED TOILET MODEL 2462.100, WITH AMERICAN STANDARD 5324.019 OPEN FRONT SEAT.	
LAV	LAVATORY	ADA COMPLIANT	COUNTER MOUNTED	1i"	1i"	i"	i"	FIXTURE: SOLID SURFACE COUNTERTOP WITH INTEGRAL BOWLS BY G.C. FAUCET: AMERICAN STANDARD SEVA NO. 1480.V05.100, POLISHED CHROME-PLATED CAST BRASS, SINGLE CONTROL MONOBLOCK, WITH 0.5 GPM VANDAL-RESISTANT SPRAY. TRAP: McGUIRE 155WC STRAINER WITH 1r" OFFSET TAILPIECE, McGUIRE 1r" X 1i" 17 GAUGE CHROME-PLATED CAST BRASS P-TRAP WITH CLEANOUT PLUG. SUPPLIES: McGUIRE i" X y" CHROME-PLATED CAST BRASS FLEXIBLE LAVATORY SUPPLY KITS, WITH LOOSE KEY ANGLE STOPS. PROVIDE MIXING VALVE BELOW COUNTER RADA 215 SET TO 110°.	
MOP SK	MOP SINK	FLOOR MOUNTED	TERRAZZO	3"	2"	½"	½"	STERN WILLIAMS MODEL # MTB-3624-BP MOLDED TERRAZZO BASIN WITH DRAIN BODY AND STRAINER. AMERICAN STANDARD "EXPOSED YOKE WALL-MOUNT UTILITY FAUCET WITH TOP BRACE, VACUUM BREAKER, STOPS IN SHANKS, METAL LEVER HANDLES AND A 6" THREADED SPOUT. PROVIDE SPLASH CATCHER/WALL GUARD.	
UR	URINAL	WALL HUNG FLUSH VALVE ADA HEIGHT	VITREOUS CHINA	2"	2"	s"	–	FIXTURE: AMERICAN STANDARD WASHBROOK FLOWISE NO. 6590.125, 0.125 GALLONS PER FLUSH, WASHOUT FLUSHING ACTION, s" TOP SPUD. FLUSH VALVE: SLOAN ROYAL MODEL 186-0.13, EXPOSED DIAPHRAGM TYPE, 0.13 GALLONS PER FLUSH. CARRIER: ZURN Z1222 SERIES WALL URINAL SUPPORT SYSTEM WITH TOP AND BOTTOM SUPPORT PLATES.	
EWC	ADA WATER COOLER	WALL MOUNTED	STAINLESS STEEL	1-1/4"	1-1/2"	½"	–	HANDICAP DRINKING FOUNTAIN, SUNROC MODEL # ADAD-8-WF1, WALL MOUNTED BARRIER FREE. WADE 420AM11-M36 CARRIER AS REQUIRED. 115V, 5.1A, MUST MEET ADA CODE.	

GENERAL NOTES

1. FIXTURES SHALL BE AS INDICATED OR APPROVED EQUAL.
2. ALL FIXTURES SHALL COMPLY WITH NCBC 2012 TABLE 604.4.
3. ALL FIXTURE TRIM PACKAGES INCLUDING BUT NOT LIMITED TO TRAP, ANGLE STOP, FLUSH VALVE, SUPPLY TUBES, AND CLEANOUT COVER PLATES SHALL BE SAME FINISH AS THE ABOVE SPECIFIED FAUCET AND PER ARCHITECTURAL FINISH SCHEDULE.
4. ALL FIXTURES SHALL BE ROUGHED IN PER MANUFACTURER INSTRUCTIONS.
5. HOT WATER IS REQUIRED AT ALL SINKS.
6. VERIFY WATER SERVICE SIZE AND LOCATION.
7. VERIFY SANITARY SEWER SIZE AND LOCATION.

SHOCK ARRESTOR SCHEDULE

P.D.I. SIZE	FIXTURE UNITS	MANUFACTURER OR EQUAL
SA'A'	1 – 11	ZURN, SMITH, PPI, SIOUX-CHIEF
SA'B'	12 – 32	"
SA'C'	33 – 60	"
SA'D'	61 – 113	"
SA'E'	114 – 154	"
SA'F'	155 – 330	"

LOCATE SHOCK ARRESTORS IN AN ACCESSIBLE LOCATION, OR PROVIDE SIOUX-CHIEF SHOCK ARRESTORS ONLY.
PROVIDE SHOCK ARRESTORS AS INDICATED PER SCHEDULE.
SHOCK ARRESTORS SHALL BE SAME SIZE AS PIPE INSTALLED ON, MINIMUM.

WATER HAMMER ARRESTER REQUIREMENTS:

1. PROVIDE WATER HAMMER ARRESTERS CONFORMING TO PDI-WH201 OR ASSE 1010, INSTALLED PER MANUFACTURER'S SPECIFICATIONS, WHERE QUICK CLOSING VALVES ARE UTILIZED. A QUICK CLOSING VALVE IS A VALVE OR FAUCET THAT CLOSES AUTOMATICALLY WHEN RELEASED, OR THAT IS CONTROLLED BY MECHANICAL MEANS FOR FAST-ACTION CLOSING. REFER TO WATER HAMMER ARRESTER SCHEDULE.

2. AS A MINIMUM, PROVIDE ONE WATER HAMMER ARRESTER FOR EACH BRANCH LINE TO EACH TOILET ROOM LESS THAN 20' IN LENGTH, LOCATED BETWEEN THE LAST TWO FIXTURES SERVED. FOR BRANCH LINES GREATER THAN 20' IN LENGTH, A SECOND WATER HAMMER ARRESTER IS REQUIRED.

WATER HEATER SCHEDULE

MARK	EQUIPMENT	MANUFACTURER & MODEL NO.	SPECIFICATION
WH	DOMESTIC WATER HEATER	LOCHINVAR MODEL LTJ030PP	LOCHINVAR ELECTRIC WATER HEATER. TALL MODEL. 30 GALLONS 208V 1ø 6.0KW.

FIRE PROTECTION GENERAL NOTES

1. THE FIRE PROTECTION OF THIS BUILDING SHALL BE IN ACCORDANCE WITH STATE AND LOCAL CODES AND SHALL CONFORM TO NFPA 13 GENERAL REQUIREMENTS AND IN FULL COMPLIANCE WITH COUNTY FIRE MARSHAL.
2. THE CONTRACTOR SHALL PRODUCE SHOP DRAWINGS OF A 13 SYSTEM SHOWING COORDINATION WITH ALL STRUCTURAL AND HVAC COMPONENTS.
3. THE CONTRACTOR SHALL PRODUCE HIS OWN HYDRAULICALLY DESIGNED SYSTEM FOR REVIEW AND APPROVAL BY THE LOCAL FIRE MARSHALS OFFICE AND ARCHITECT FOR USE ON THIS PROJECT.
4. SPRINKLER SYSTEM DESIGN SHALL BE BASED ON THE FOLLOWING CRITERIA:
   A. SPACING OF HEADS: 16'x16'-PENDANT
   B. TYPE OF PIPE: GREY POLYBUTYLENE, "BLAZEMASTER", OR APPROVED EQUAL
   C. TYPE OF FASTENING OF PIPE: HEAT FUSION
   D. TYPE OF BACKFLOW PREVENTION: DUAL CHECK VALVE
   E. SIZE OF MAIN LINE AT STREET: REFER TO CIVIL DRAWINGS
   F. SIZE OF BRANCH LINES: s"
   G. TYPE AND DEGREE OF HEADS USED: VIKING MODEL H RESIDENTIAL CHROME PLATED PENDANT WITH CHROME ESCUTCHEON PLATES, 165° F. RATED OR EQUAL
   H. FLOW VERIFICATION SHALL BE PERFORMED BY THE CONTRACTOR PRIOR TO CALLING FIRE MARSHALS OFFICE FOR APPOINTMENT FOR INSPECTORS FLOW TEST.
   I. HEAD SPACING CRITERIA SHALL BE AS FOLLOWS;
      1. NO MORE THAN 8'-0" OFF WALL
      2. NO LESS THAN 8'-0" APART
      3. NO MORE THAN 16'-0" APART
      4. NO LESS THAN 1'-6" FROM THE RANGE FOOTPRINT
      5. NO LESS THAN 7'-0" IN FRONT OF OR 3'-0" TO THE SIDE OF A RECESSED FIREPLACE
5. CONTRACTOR SHALL BE RESPONSIBLE FOR OBTAINING CURRENT FIRE FLOW TEST.
6. THE ELEVATOR SPRINKLER SYSTEM SHALL BE DESIGNED TO ACTIVATE AFTER THE HEAT DETECTOR OPERATES AND THE POWER IS DISCONNECTED.
7. A STANDPIPE IS REQUIRED DURING CONSTRUCTION IN ACCORDANCE WITH IFC 905.10, 1412.1.
8. SPRINKLER HEADS SHALL NOT BE PROVIDED IN GUEST BATHROOMS UNLESS REQUIRED BY CODE AND/OR JURISDICTION HAVING AUTHORITY.
9. FIRE PROTECTION ENGINEER SHALL PERFORM ALL CALCULATIONS NECESSARY TO DETERMINE FIRE LINE SIZE.
10. PROVIDE FIRE BOOSTER PUMP AS REQUIRED. EXACT SIZE SHALL BE HYDRAULICALLY CALCULATED AND DETERMINED BY A LICENSED FIRE PROTECTION ENGINEER/CONTRACTOR. FIRE CONTRACTOR TO PROVIDE ALL COMPONENTS NECESSARY AND/OR RECOMMENDED TO PROVIDE A COMPLETE CODE COMPLIANT SYSTEM

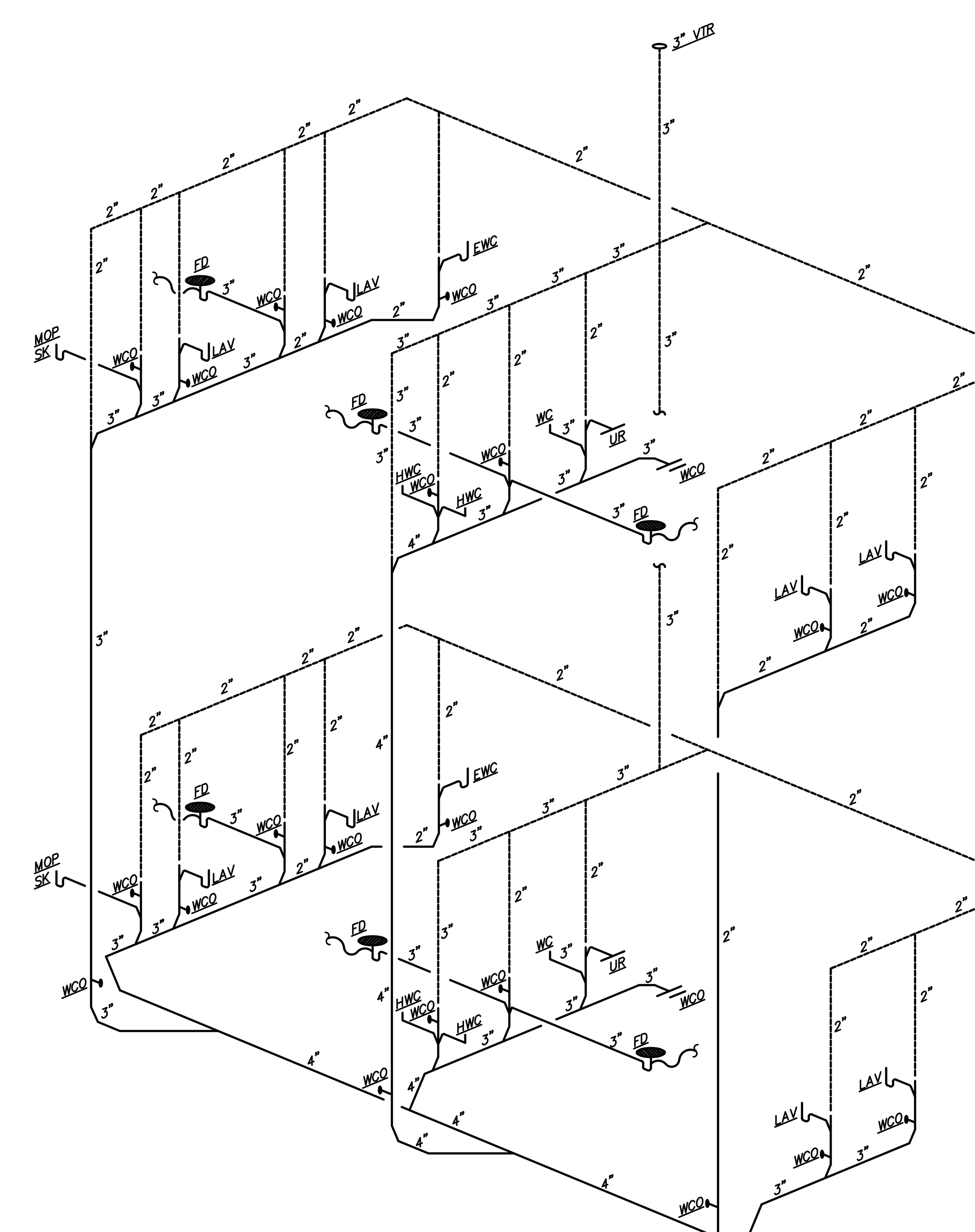

5 SANITARY ISOMETRIC
P0.11 NOT TO SCALE

overcash demmit
2010 south tryon st. suite 1a
charlotte north carolina 2820
office.704.332.1615
web. www.oda.us.com

SOUTH CAROLINA REGISTERED PROFESSIONAL ENGINEER No.23809 JEFFREY B. CHRISTIAN 4/8/16

Kuester COMMERCIAL

Fort Mill Theater Renovation Phase I

100 Main Street
Fort Mill, SC 29715

FOR CONSTRUCTION
ISSUE DATE: 04/08/16

No.	Description	Date

PLUMBING COVER SHEET

P0.11

Copyright 2016 Overcash Demitt Archite
ODA No. 152960

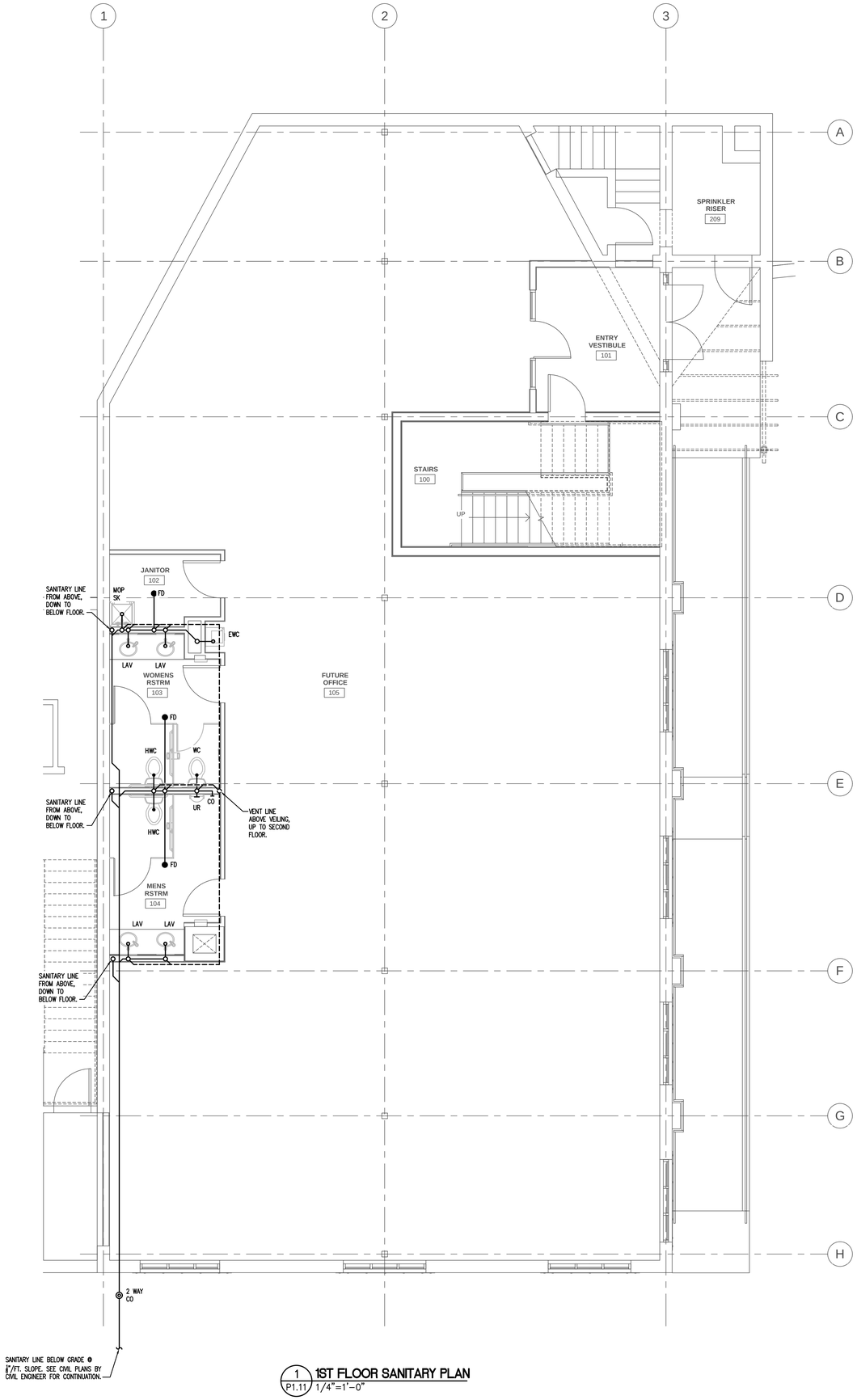

1 P1.11 **1ST FLOOR SANITARY PLAN**
1/4"=1'-0"

ODA
overcash demmit
2010 south tryon st. suite 1a
charlotte north carolina 2820
office.704.332.1615
web. www.oda.us.com

SOUTH CAROLINA PROFESSIONAL ENGINEER SEAL 23809 JEFFREY B. CHRISTIAN 4/8/16

Kuester COMMERCIAL

Fort Mill Theater Renovation Phase I

100 Main Street
Fort Mill, SC 29715

FOR CONSTRUCTION
ISSUE DATE: 04/08/16

No.	Description	Date

1ST FLOOR SANITARY PLAN

P1.11

Copyright 2016 Overcash Demitt Archite
ODA No. 152960

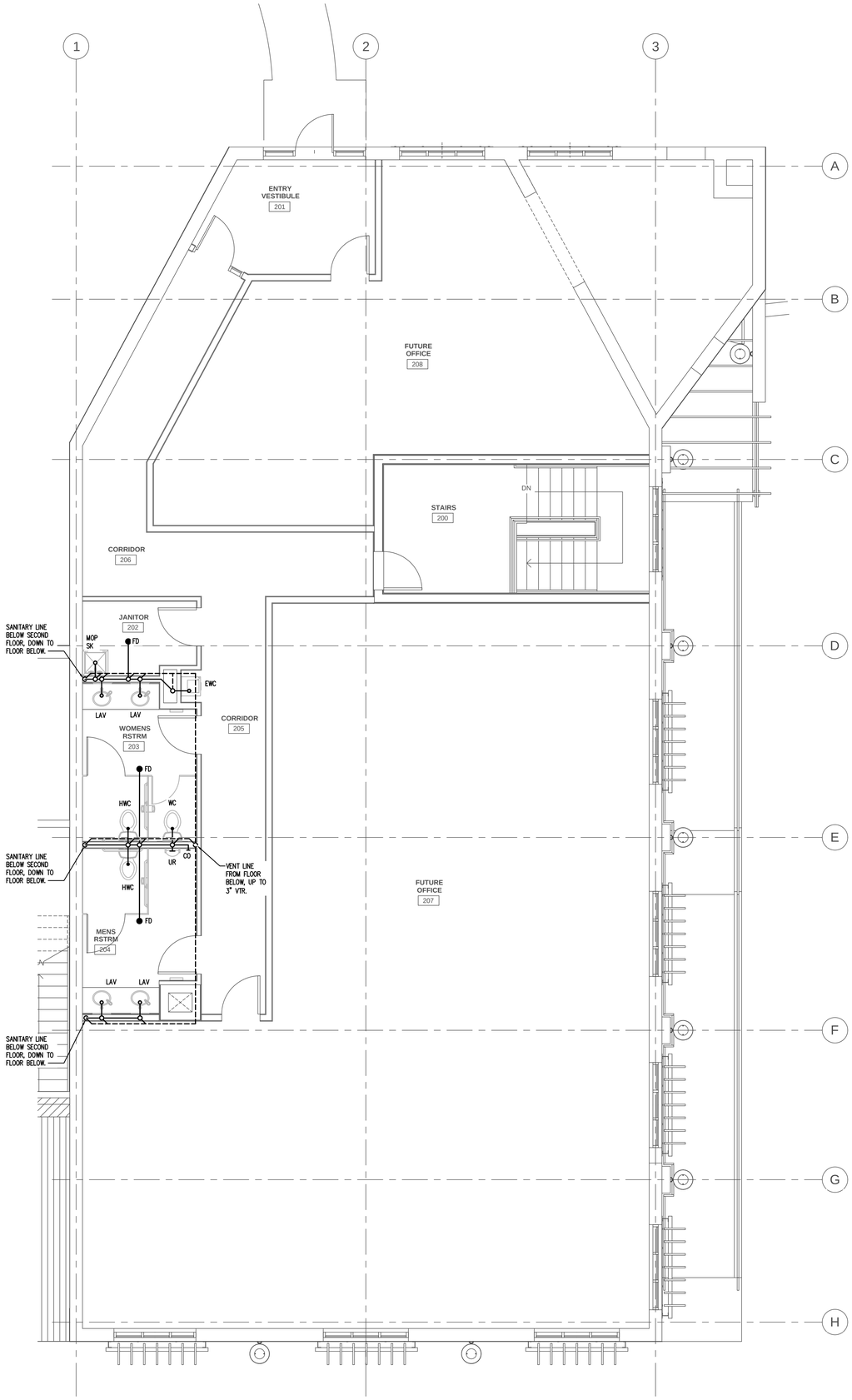

1 P1.12 **2ND FLOOR SANITARY PLAN**
1/4"=1'-0"

ODA
overcash demmitt
2010 south tryon st. suite 1a
charlotte north carolina 2820
office.704.332.1615
web. www.oda.us.com

SOUTH CAROLINA PROFESSIONAL ENGINEER NO. 23809 JEFFREY B. CHRISTIAN 4/8/16

Kuester COMMERCIAL

Fort Mill Theater Renovation Phase I

100 Main Street
Fort Mill, SC 29715

FOR CONSTRUCTION
ISSUE DATE: 04/08/16

No.	Description	Date

2ND FLOOR SANITARY PLAN

P1.12

Copyright 2016 Overcash Demitt Archite
ODA No. 152960

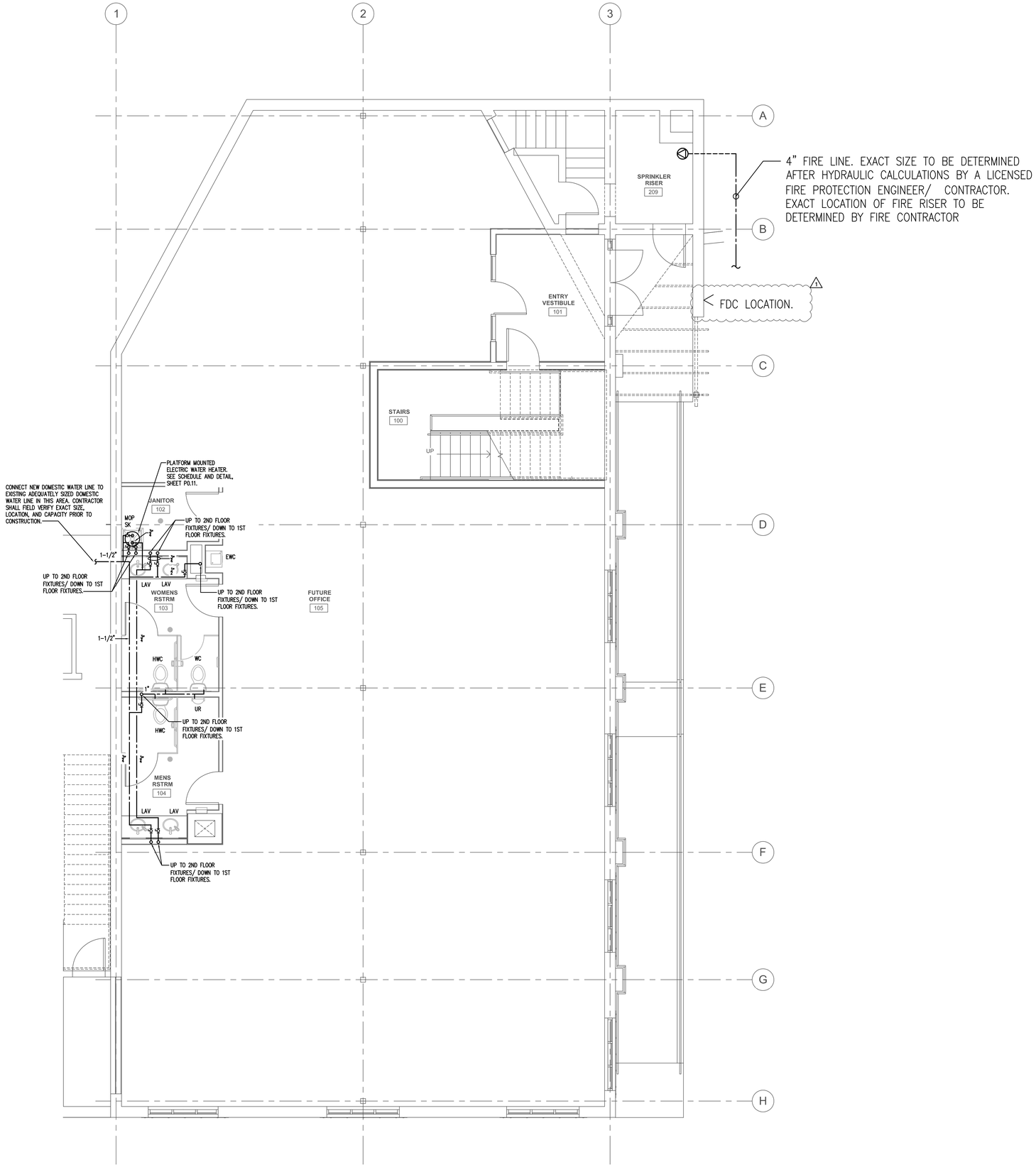

1 P2.11 **1ST FLOOR DOMESTIC WATER PLAN**
1/4"=1'-0"

ODa
overcash demmitt
2010 south tryon st. suite 1a
charlotte north carolina 28203
office.704.332.1615
web. www.oda.us.com

JUDITH CARR WEBB
NORTH CAROLINA
No. 23809
REGISTERED ARCHITECT
JEFFREY B. CHRISTIAN
5/25/16

Kuester COMMERCIAL

Fort Mill Theater Renovation-Phase I

100 Main Street
Fort Mill, SC 29715

FOR CONSTRUCTION
ISSUE DATE: 04/08/16

No.	Description	Date
1	Code Comments	5-25-16

FIRST FLOOR DOMESTIC WATER PLAN

P2.11

Copyright 2016 Overcash Demitt Architects

ODA No. 152960

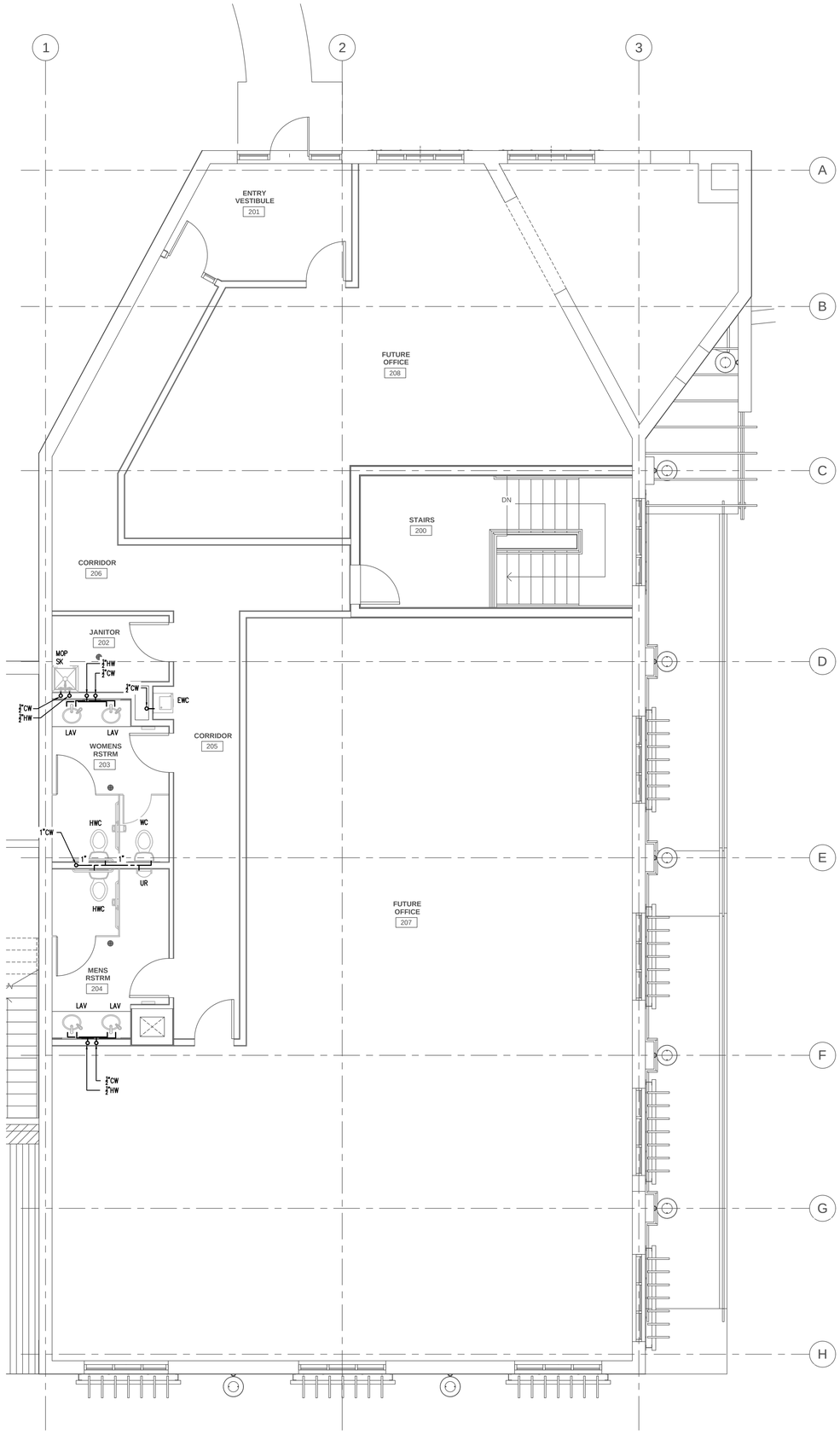

1 P2.12 2ND FLOOR DOMESTIC WATER PLAN
1/4"=1'-0"

ODA
overcash demmit
2010 south tryon st. suite 1a
charlotte north carolina 2820
office.704.332.1615
web. www.oda.us.com

SOUTH CAROLINA PROFESSIONAL ENGINEER
No. 23809
JEFFREY B. CHRISTIAN
4/8/16

Kuester COMMERCIAL

Fort Mill Theater Renovation Phase I

100 Main Street
Fort Mill, SC 29715

FOR CONSTRUCTION
ISSUE DATE: 04/08/16

No.	Description	Date

SECOND FLOOR DOMESTIC WATER PLAN

P2.12

Copyright 2016 Overcash Demitt Archite
ODA No. 152960